

GAMFIOR
Ground ball screws

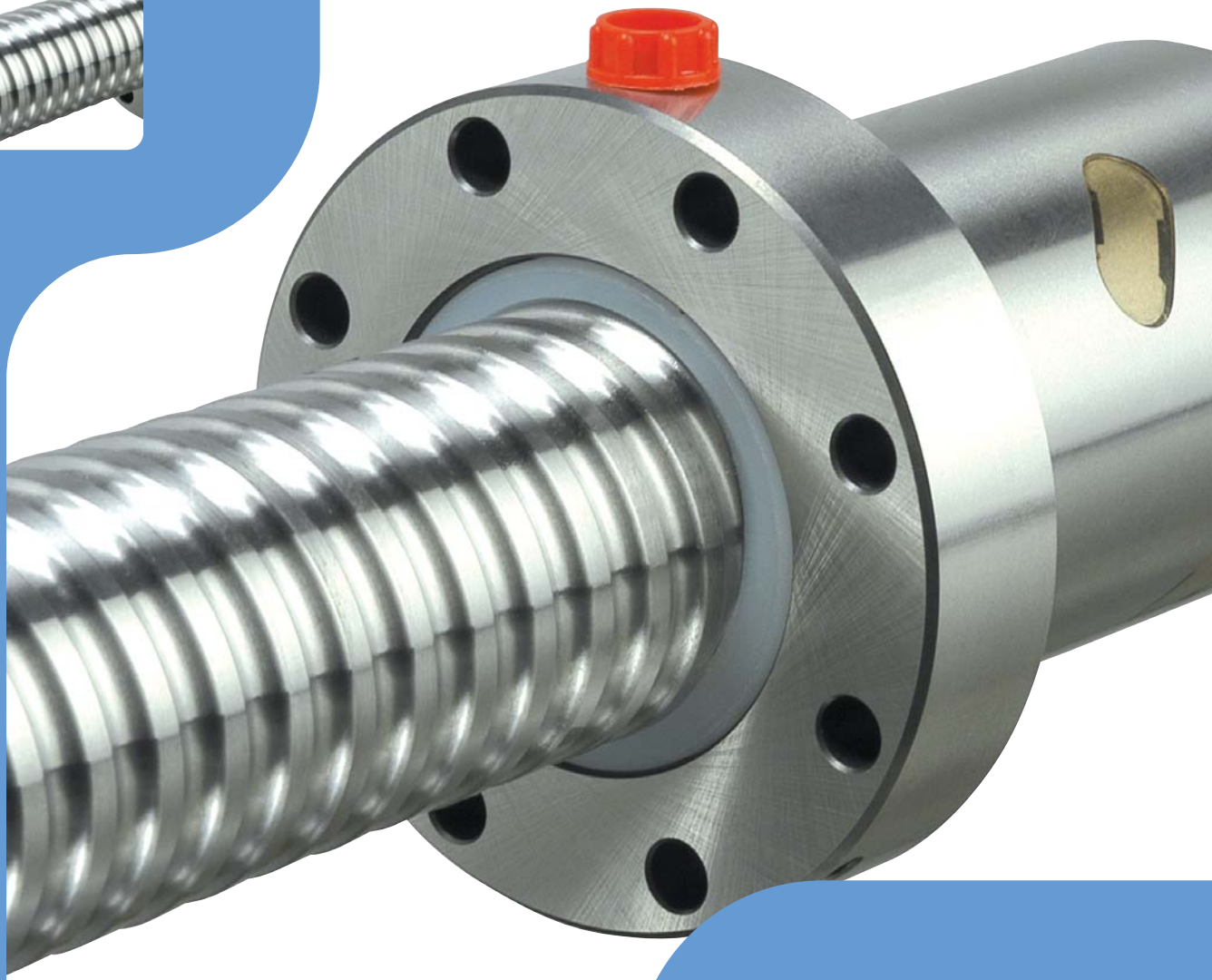

Contents

The SKF brand now stands for more than ever before, and means more to you as a valued customer.

While SKF maintains its leadership as the hallmark of quality bearings throughout the world, new dimensions in technical advances, product support and services have evolved SKF into a truly solutions-oriented supplier, creating greater value for customers.

These solutions encompass ways to bring greater productivity to customers, not only with breakthrough application-specific products, but also through leading-edge design simulation tools and consultancy services, plant asset efficiency maintenance programmes, and the industry's most advanced supply management techniques.

The SKF brand still stands for the very best in rolling bearings, but it now stands for much more.

SKF – the knowledge engineering company

1 General 3

2 Recommendations 5

Selection 5
- Basic dynamic load rating 5
- Static load carrying capacity 6
- Critical rotating speed for screw shafts 6
- Permissible speed limit 6
- Efficiency and back-driving 7
- Axial play and preload 7
- Static axial stiffness of a complete assembly 8
- Screw shaft buckling 8
- Manufacturing precision 9
- Materials and heat treatments 9
- Number of circuits of balls 9

Assembly procedure 10
- Radial and moment loads 10
- Alignment 10
- Lubrication 10
- Designing the screw shaft ends 10
- Starting-up the screw 10
- Operating temperature 10

3 Technical data 11

Lead precision according to ISO 11
Geometric tolerance 12
Design and functional specifications 15
- Geometric profile of the track/ball area 15
- Preload 15
- Materials and thermal expansions 16
- Checking of the maximum axial operating load 17

Application of precision ball screw 18
Calculation formulas 19

4 Product information 22

Ordering key 22
PGFJ Flanged nut with internal preload, DIN standard 23
PGFL Double preloaded flanged nut long lead 24
PGFE Double preloaded flanged nut 25
PGCL Cylindrical double preloaded nut 28
Standard end machined 30
End bearings 31
Product Inspection and certification 32
How to orientate your choice 34

SKF - the knowledge engineering company 36

General

SKF Group

The SKF Group is an international industrial corporation owned by SKF Sweden AB. Founded in 1907, the company has some 39 000 employees, 80 manufacturing sites and a sales network via its own sales companies, distributors and dealers covering 150 countries around the world. SKF is the world leader in the rolling bearing business.

SKF Machine Tool & Precision Technologies

SKF Machine Tool & Precision Technologies is an organization within SKF that is dedicated to the manufacturing and sales of high-precision products and services for the machine tool industry.
Wherever accuracy, high speed, high precision or reliability of machine tool precision parts is required - from the aerospace to automotive industries, from machine tool to woodworking machinery applications, from glass and marble processing to turbochargers - SKF Machine Tool & Precision Technologies can offer the right solution.



Gamfior: a history of precision

Gamfior is, without any doubt, one of the most typical company in Turin. Today Gamfior is 75 years old and represents a “classic” example among the precision mechanical manufacturing companies. With its highly qualified experience, accumulated through constant contacts with manufacturers and users of machine tools, Gamfior has highlighted its ability to gear its products to increasingly fast technical-production developments, in many cases ahead of demand. Gamfior has been engaged in high precision mechanics since 1928, the year in which the Company was founded.

Main stages in company development are outlined below:

- 1928: start of production comprising spindles, gauges, tailstocks;
- at the start of the 50’s: start of production of high frequency spindles;
- end of the 60’s: start of production of precision ball screws;
- end of the 70’s: start of production of electronic drive equipment for high frequency spindles.
- early 80’s: start of production of hydrostatic and hydrodynamic spindles; start of production of single- and multi-spindle heads for automotive industry.
- early 90’s: production of high speed cutting equipment for milling industry.

The facility consists of buildings and departments plunged in a plantation of about a thousand conifers. The plant comprises single area of 45 000 sq. mts. of which 16 000 sq. mts. covered. The production environment reflects the constant attention that Gamfior dedicates to its human resources, with traditional machine tools, where the skill and experience of the operator is decisive, side by side with foreman NC machines, used for mass production. Scientific computers and a CAD system play an important role in new product design and development, allowing Gamfior to meet market requirements in a timely manner. The export share is really important, representing the 50 % of the sales total amount.The most significant aspect of Gamfior is the integrated development of the entire product, including its mechanical and electronic components, which provides the ideal basis for contacts with the customer.

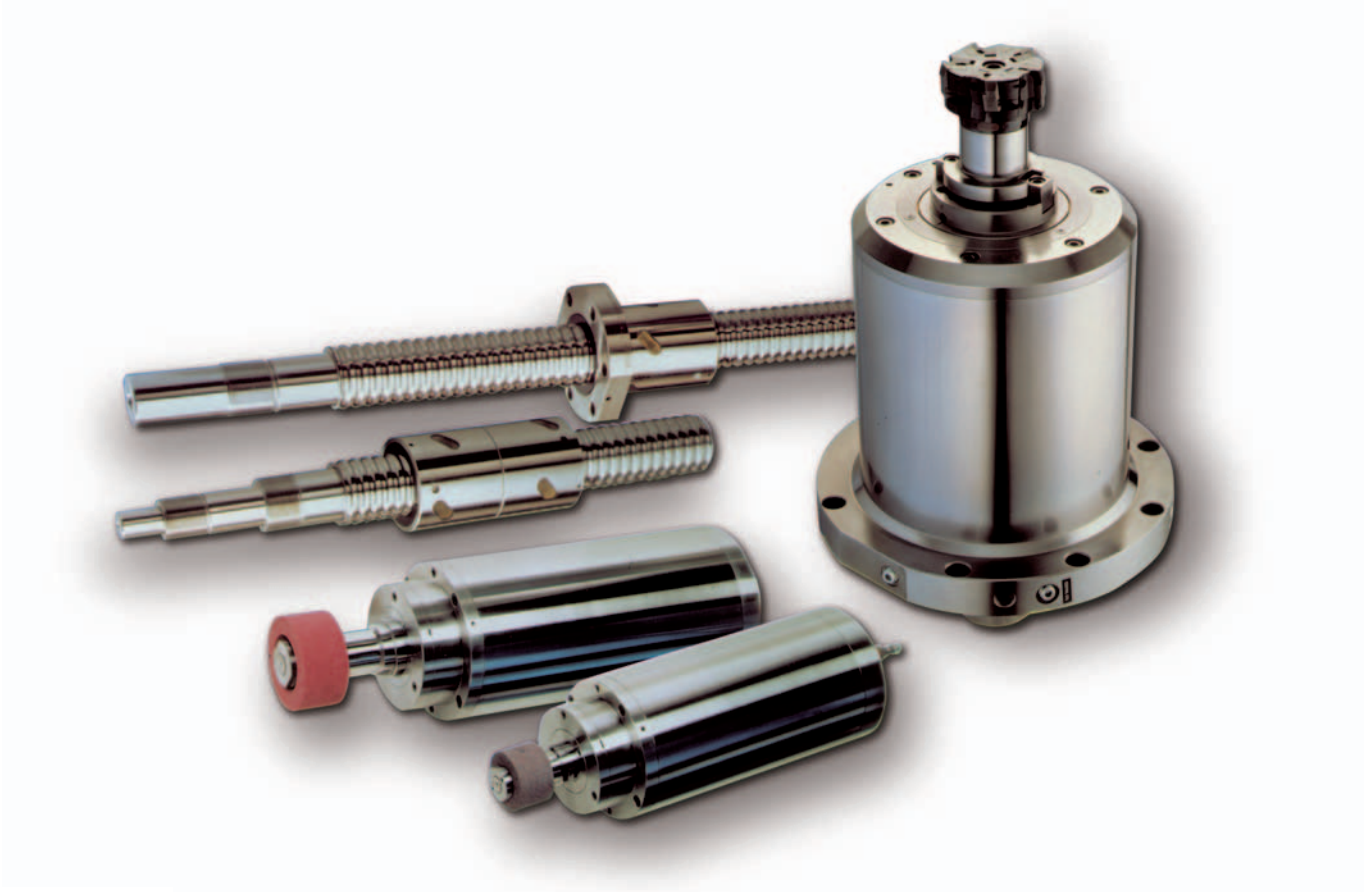

Recommendations

Selection

NB.:
Only basic selection parameters are included. To make the very best selection of a ball screw, the designer should specify such critical parameters as the load profile, the linear or rotational speed, the rates of acceleration and deceleration, the cycle rate, the environment, the required life, the lead accuracy, the stiffness, and any other special requirement. If in doubt, please consult an SKF ball screw specialist before placing an order.

Basic dynamic load rating (C_a)

The dynamic rating is used to compute the fatigue life of ball screws. It is the axial load constant in magnitude and direction, and acting centrally under which the nominal life (as defined by ISO) reaches one million revolutions.



Nominal fatigue life L_{10}
The nominal life of a ball screw is the number of revolutions (or the number of operating hours at a given constant speed) which the ball screw is capable of enduring before the first sign of fatigue (flaking, spalling) occurs on one of the rolling surfaces.

It is however evident from both laboratory tests and practical experience that seemingly identical ball screws operating under identical conditions have different lives, hence the notion of **nominal life**. It is, in accordance with ISO definition, the life achieved or exceeded by 90 % of a sufficiently large group of apparently identical ball screws, working in identical conditions (alignment, axial and centrally applied load, speed, acceleration, lubrication, temperature and cleanliness).

Service life
The actual life achieved by a specific ball screw before it fails is known as “service life”. Failure is generally by wear, not by fatigue (flaking or spalling); wear of the recirculation system, corrosion, contamination, and, more generally, by loss of the functional characteristics required by the application. Experience acquired with similar applications will help to select the proper screw to obtain the required service life. One must also take into account structural requirements such as the strength of screw ends and nut attachments, due to the loads applied on these elements in service.

Equivalent dynamic loads
The loads acting on the screw can be calculated according to the laws of mechanics if the external forces (e.g. power transmission, work, rotary and linear inertia forces) are known or can be calculated. It is necessary to calculate the equivalent dynamic load: this load is defined as that hypothetical load, constant in magnitude and direction, acting axially and centrally on the screw which, if applied, would have the same influence on the screw life as the actual loads to which the screw is subjected.

Radial and moment loads must be taken by linear bearing systems. It is extremely important to resolve these problems *at the earliest conceptual stage*. These forces are detrimental to the life and the expected performance of the screw.

Fluctuating load
When the load fluctuates during the working cycle, it is necessary to calculate the equivalent dynamic load: this load is defined as that hypothetical load, constant in magnitude and direction, acting axially and centrally on the screw which, if applied, would have the same influence on the screw life as the actual loads to which the screw is subjected. Additional loads due, for example to misalignment, uneven loading, shocks, and so on, must be taken in account. Their influence on the nominal life of the screw is generally taken care of, consult SKF for advice.

Static load carrying capacity (C_{oa})

Ball screws should be selected on the basis of the basic static load rating C_{oa} instead of on bearing life when they are submitted to continuous or intermittent shock loads, while stationary or rotating at very low speed for short duration. The permissible load is determined by the permanent deformation caused by the load acting at the contact points. It is defined by ISO standards as the purely axially and centrally applied static load which will create, by calculation, a total (rolling element + thread surface) permanent deformation equal to 0,0001 of the diameter of the rolling element.

A ball screw must be selected by its basic static load rating which must be, at least, equal to the product of the maximum axial static load applied and a safety factor "so". The safety factor is selected in relation with past experience of similar applications and requirements of running smoothness and noise level [(1)].



Critical rotating speed for screw shafts

The shaft is equated to a cylinder, the diameter of which is the root diameter of the thread. The formulas use a parameter the value of which is dictated by the mounting of the screw shaft (whether it is simply supported or fixed). As a rule the nut is not considered as a support of the screw shaft. Because of the potential inaccuracies in the mounting of the screw assembly, a safety factor of. 80 is applied to the calculated critical speeds.

Calculations which consider the nut as a support of the shaft, or reduce the safety factor, require practical tests and possibly an optimization of the design [(1)].

Permissible speed limit

The permissible speed limit is that speed which a screw cannot reliably exceed at any time. It is generally the limiting speed of the recirculation system in the nut. It is expressed as the product of the rpm and the nominal diameter of the screw shaft (in mm).

The speed limits quoted in this catalogue are the **maximum speeds that may be applied through very short periods** and in optimized running conditions of alignment, light external load and preload with monitored lubrication. Running a screw continuously at the permissible speed limit may lead to a reduction of the calculated life of the nut mechanism.

The lubrication of screws rotating at high speed must be properly considered in quantity and quality. The volume, spread and frequency of the application of the lubricant (oil or grease) must be properly selected and monitored). At high speed the lubricant spread on the surface of the screw shaft may be thrown off by centrifugal forces. It is important to monitor this phenomenon during the first run at high speed and possibly adapt the frequency of re-lubrication or the flow of lubricant, or select a lubricant with a different viscosity. Monitoring the steady temperature reached by the nut permits the frequency of re-lubrication or the oil flow rate to be optimized.

[(1)] SKF can help you to define this value in relation with the actual conditions of service.

ATTENTION!:
High speed associated with high load requires a large input torque and yields a relatively short nominal life[(1)].
In the case of high acceleration and deceleration, it is recommended to either work under a nominal external load or to apply a light preload to the nut to avoid internal sliding during reversal. The value of preload of screws submitted to high velocity must be that preload which ensures that the rolling elements do not slide[(1)].
Too high a preload will create unacceptable increases of the internal temperature.

Efficiency and back-driving

The performance of a screw is mainly dependant on the geometry of the contact surfaces and their finish as well as the helix angle of the thread. It is, also, dependant on the working conditions of the screw (load, speed, lubrication, preload, alignment, etc...).

The "**direct efficiency**" is used to define the input torque required to transform the rotation of one member into the translation of the other. Conversely, the "**indirect efficiency**" is used to define the axial load required to transform the translation of one member into the rotation of the other one. It is used, also, to define the braking torque required to prevent that rotation.

It is safe to consider that these screws are reversible or back-driveable under almost all circumstances.
It is therefore necessary to design a brake mechanism if backdriving is to be avoided (gear reducers or brake).

Preload torque:
Internally preloaded screws exhibit a torque due to this preload. This persists even when they are not externally loaded. Preload torque is measured at 100 rpm (without wipers) when assembly is lubricated with ISO grade 68 oil.

Starting torque:
This is defined as the torque needed to overcome the following to start rotation:
a) the total inertia of all moving parts accelerated by the energy source (including rotation and linear movement).
b) the internal friction of the screw/nut assembly, bearing and associated guiding devices.

In general, torque to overcome inertia (a) is greater than friction torque (b).

The coefficient of friction of the high efficiency screw when starting μs is estimated at up to double the dynamic coefficient μ, under normal conditions of use.

Axial play and preload

Preloaded nuts are subject to much less elastic deformation than non-preloaded nuts. Therefore they should be used whenever the accuracy of positioning under load is important.

Preload is that force applied to a set of two half nuts to either press them together or push them apart with the purpose of eliminating backlash or increasing the rigidity or stiffness of the assembly. The preload is defined by the value of the preload torque (see under that heading in the previous paragrah). The torque depends on the type of nut and on the mode of preload (elastic or rigid).

Preload systems

Fig. 1

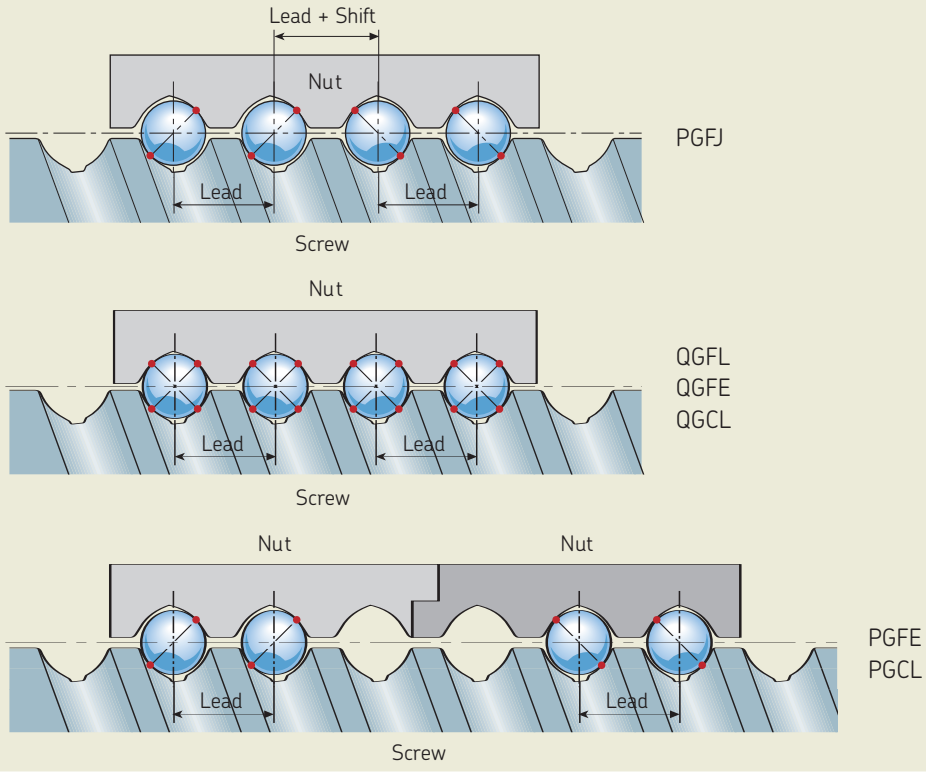

Static axial stiffness of a complete assembly

It is the ratio of the external axial load applied to the system and the axial displacement of the face of the nut in relation with the fixed (anchored) end of the screw shaft. The inverse of the rigidity of the total system is equal to the sum of all the inverses of the rigidity of each of the components (screw shaft, nut as mounted on the shaft, supporting bearing, supporting housings, etc...).

Because of this, the rigidity of the total system is always less than the smallest individual rigidity.

Nut rigidity
When a preload is applied to a nut, firstly, the internal play is eliminated, then, the Hertzian elastic deformation increases as the preload is applied so that the overall rigidity increases. The theoretical deformation does not take into account machining inaccuracies, actual sharing of the load between the different contact surfaces, the elasticity of the nut and of the screw shaft. The practical stiffness values given in the catalogue are lower than the theoretical values for this reason. The rigidity values given in the SKF ball screw catalogue are individual practical values for the assembled nut. They are determined by SKF based on the value of the selected basic preload and an external load equal to twice this preload.

Elastic deformation of screw shaft
This deformation is proportional to its length and inversely proportional to the square of the root diameter.

According to the relative importance of the screw deformation (see rigidity of the total system), too large an increase in the preload of the nut and supporting bearings yields a limited increase of rigidity and notably increases the preload torque and therefore the running temperature. Consequently, the preload stated in the catalogue for each dimension is optimum and should not be increased.

Screw shaft buckling

The column loading of the screw shaft must be checked when it is submitted to compression loading (whether dynamically or statically). The maximum permissible compressive load is calculated using the Euler formulas. It is then multiplied by a safety factor of 3 to 5, depending on the application.

The type of end mounting of the shaft is critical to select the proper coefficients to be used in the Euler formulas.

When the screw shaft comprises a single diameter, the root diameter is used for the calculation. When the screw comprises different sections with various diameters, calculations becomes more complex [1].



[1] SKF can help you to define this value in relation with the actual conditions of service.

Manufacturing precision

Generally speaking, the precision indication given in the designation defines the lead precisions see page 11 – lead precision according to ISO – (ex. G5 - G3...).

Parameters other than lead precision correspond to our internal standards (generally based on ISO class 5).

If you require special tolerances (for example class 5) please specify when requesting a quotation or ordering.

Materials and heat treatments

Standard screw shafts are machined from steel which is surface hardened by induction (C48 or equivalent).

Standard nuts are machined in steel which is carburized and through hardened (18 Ni CrMo5 or equivalent).

Hardness of the contact surfaces is 59-62 HRc, depending on diameter, for standard screws.

Number of circuits of balls

A nut is defined by the number of ball turns which support the load.

The number is changing, according to the product and the combination diameter/lead.

It is defined by the number of circuits and their type.

Working environment

Our products have not been developed for use in an explosive atmosphere, consequently we cannot take any responsability for the use in this field.



Assembly procedure

Note.:
Ground ball screws are precision components and should be handled with care to avoid shocks. When stored out of the shipping crate they must lie on wooden or plastic vee blocks and should not be allowed to sag.
Screw assemblies are shipped, wrapped in a heavy gauge plastic tube which protects them from foreign material and possible pollution. They should stay wrapped until they are used.

Radial and moment loads

Any radial or moment load on the nut will overload some of the contact surfaces, thus significantly reducing its life.

Alignment

SKF linear guidance components should be used to ensure correct alignment and avoid non-axial loading.

The parallelism of the screw shaft with the guiding devices must be checked. If external linear guidance prove impractical, we suggest mounting the nut on trunnions or gimbals and the screw shaft in self-aligning bearings.

Mounting the screw in tension helps align it properly and eliminates bucking.

Lubrication

Good lubrication is essential for the proper functioning of the screw and for its long term reliability(1).

Before shipping, the screw is coated with a protective fluid that dries to a film. **This protective film is not a lubricant**.

Depending on the selected lubricant, it may be necessary to remove this film before applying the lubricant (there may be a risk of non-compatibility).

If this operation is performed in a potentially polluted atmosphere it is highly recommended to proceed with a thorough cleaning of the assembly.

Designing the screw shaft ends

Generally speaking, when the ends of the screw shaft are specified by the customer's engineering personnel, it is their responsability to check the strength of these ends. However, we offer in pages 16 and 17 of this catalogue, a choice of standard machined ends. As far as possible, we recommend their use.

Whatever your choice may be, please keep in mind that no dimension on the shaft ends can exceed do (otherwise traces of the root of thread will appear or the shaft must be made by joining 2 pieces).

A minimum shoulder should be sufficient to maintain the internal bearing.

Starting-up the screw

After the assembly has been cleaned, mounted and lubricated, it is recommended that the nut is allowed to make several full strokes at low speed; to check the proper positioning of the limit switches or reversing mechanism before applying the full load and the full speed.

Operating temperature

Screws made from standard steel and operating under normal loads can sustain temperatures in the range –10 °C ÷ + 70 °C.

Above 70 °C, materials adapted to the temperature of the application should be selected. Consult SKF for advice.

Note:
Operating at high temperature will lower the hardness of the steel, alter the accuracy of the thread and may increase the oxidability of the materials.

Technical data

Lead precision according to ISO

Lead precision is measured at 20 °C on the useful stroke l_u, which is the threaded length decreased, at each end, by the length l_e equal to the screw shaft diameter see (➔ **table 1**) and (➔ **fig. 1**).

Table 1

	G1		G3		G5	
V300p, µm	**6**		**12**		**23**	
l_u	e_p	v_{up}	e_p	v_{up}	e_p	v_{up}
mm	µm		µm		µm	
0 - 315	6	6	12	12	23	23
(315) - 400	7	6	13	12	25	25
(400) - 500	8	7	15	13	27	26
(500) - 630	9	7	16	14	32	29
(630) - 800	10	8	18	16	36	31
(800) - 1000	11	9	21	17	40	34
(1000) - 1250	13	10	24	19	47	39
(1250) - 1600	15	11	29	22	55	44
(1600) - 2000			35	25	65	51
(2000) - 2500			41	29	78	59
(2500) - 3150					96	69
(3150) - 4000					115	82

Fig. 1

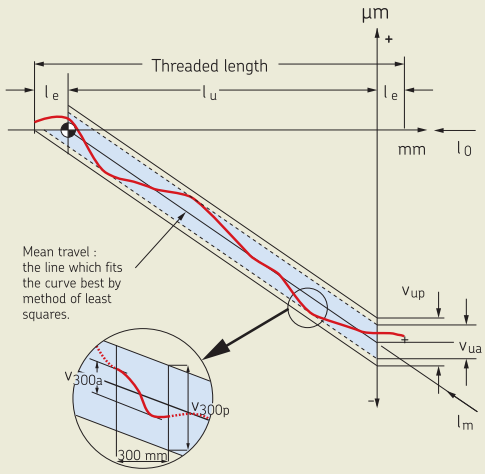

l_u = useful travel
l_e = excess travel (no lead precision required)
l_o = nominal travel
l_s = specified travel
c = travel compensation (difference between ls and lo to be defined by the customer, for instance to compensate an expansion)

e_p = tolerance over the specified travel
V = travel variation (or permissible band width)
V_{300p} = maximum permitted travel variation over 300 mm
V_{up} = maximum permitted travel variation over the useful travel lu
V_{300a} = measured travel variation over 300 mm
V_{ua} = measured travel variation over the useful travel

Case with value of c specified by the customer

Fig. 2

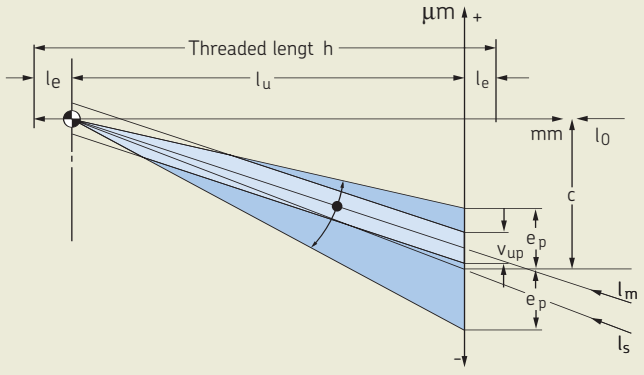

Case with c = 0 = standard version in case of no value given by the customer

Fig. 3

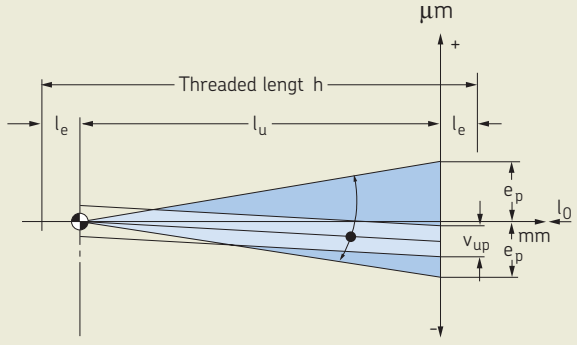

Geometric tolerances

Run-out tolerances (➔ table 2)
Tolerances tighter than the currently applicable ISO/TC39/WG7 specifications and the Internal Draft Standard ISO/DIS 3408-3 (➔ **fig. 4**). The division into ISO accuracy classes ISO 1 (➔ **table 3**), ISO 3 (➔ **table 4**), ISO 5 (➔ **table 5**) and ISO 7 (➔ **table 6**) refers, however, to these standards.

Fig. 4

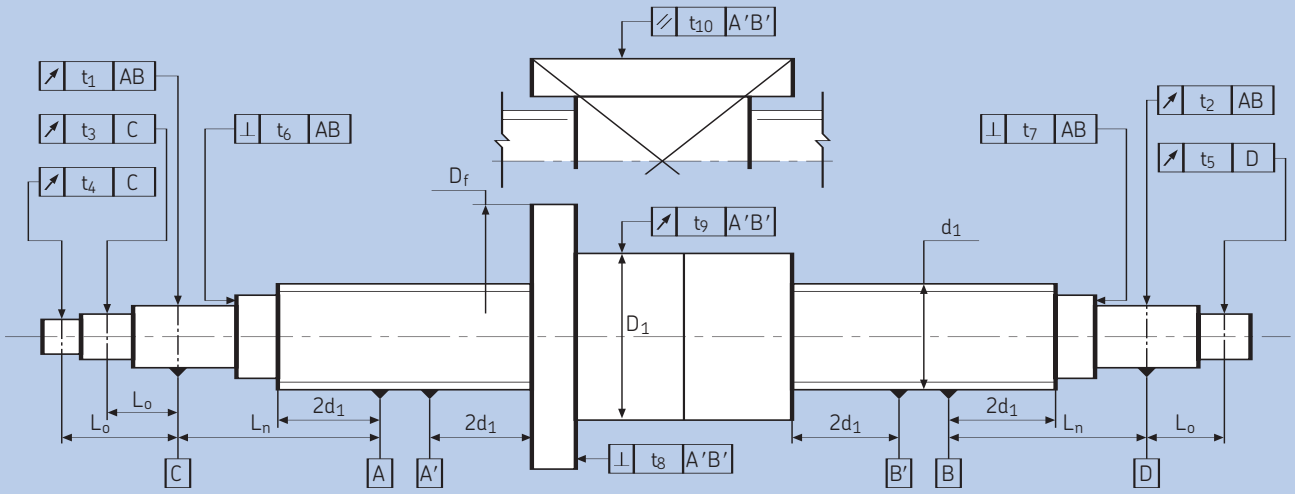

Run-out tolerances - Maximum permissible deviations

Table 2

Position "$t_1 - t_2$" Radial run-out of the diameter of bearing seat in relation to reference supports	**Position "t_9"** Radial run-out of the location diameter of the nut in relation to the reference supports
Position "$t_3 - t_4 - t_5$" Radial run-out of the diameter of the end of the screw in relation to bearings seats	**Position "t_{10}"** Deviation of the parallelism of the mounting surfaces of the nut in relation to the reference supports
Position "$t_6 - t_7$" Axial run-out of the faces of the bearing seat in relation to reference supports	**Position "t_{11}"** Radial run-out of the free ends with rigidity blocked nut
Position "t_8" Axial run-out of the ball nut location face in relation to the reference supports	

ISO 1 - *Dimensions in mm* — **Table 3**

Position "$t_1 - t_2$"				Position "$t_3 - t_4 - t_5$"			
d_1	L_n	Tolerance		d_1	L_0	Tolerance	
25 ... 50	50 ... 300	0,005 ... 0,029	$t = \frac{L_n \times 0{,}012}{125}$	25 ... 501	50 ... 100	0,002 ... 0,005	$t = \frac{L_0 \times 0{,}006}{125}$
	300 ... 500	0,029 ... 0,048			100 ... 200	0,005 ... 0,010	
	500 ... 1 000	0,048 ... 0,096			200 ... 300	0,010 ... 0,014	
63 ... 125	125 ... 300	0,010 ... 0,024	$t = \frac{L_n \times 0{,}016}{200}$	63 ... 125	50 ... 100	0,002 ... 0,004	$t = \frac{L_0 \times 0{,}008}{200}$
	300 ... 500	0,024 ... 0,040			100 ... 200	0,004 ... 0,008	
	500 ... 1 000	0,040 ... 0,080			200 ... 300	0,008 ... 0,012	

Position "t_6 - t_9"		Position "t_8"		Position "t_9"		Position "t_{10}"
d_1	Tolerance	D_f	Tolerance	D_1	Tolerance	Tolerance
25 ... 63	0,003	32 ... 63	0,012	32 ... 63	0,012	0,016
80 ... 125	0,004	63 ... 125	0,016	63 ... 125	0,016	
		125 ... 250	0,020	125 ... 250	0,020	

ISO 3 - *Dimensions in mm* — **Table 4**

Position "$t_1 - t_2$"				Position "$t_3 - t_4 - t_5$"			
d_1	L_n	Tolerance		d_1	L_0	Tolerance	
25 ... 50	50 ... 300	0,005 ... 0,038	$t = \frac{L_n \times 0{,}016}{125}$	25 ... 50	50 ... 100	0,003 ... 0,006	$t = \frac{L_0 \times 0{,}008}{125}$
	300 ... 500	0,038 ... 0,064			100 ... 200	0,006 ... 0,012	
	500 ... 1 000	0,064 ... 0,128			200 ... 300	0,012 ... 0,019	
63 ... 125	125 ... 300	0,012 ... 0,030	$t = \frac{L_n \times 0{,}020}{200}$	63 ... 125	50 ... 100	0,003 ... 0,005	$t = \frac{L_0 \times 0{,}010}{200}$
	300 ... 500	0,030 ... 0,050			100 ... 200	0,005 ... 0,010	
	500 ... 1 000	0,050 ... 0,100			200 ... 300	0,010 ... 0,015	

Position "$t_6 - t_7$"		Position "t_8"		Position "t_9"		Position "t_{10}"
d_1	Tolerance	D_f	Tolerance	D_1	Tolerance	Tolerance
25 ... 63	0,004	32 ... 63	0,016	32 ... 63	0,016	0,020
80 ... 125	0,005	63 ... 125	0,020	63 ... 125	0,020	
		125 ... 250	0,025	125 ... 250	0,025	

ISO 5 - *Dimensions in mm* — **Table 5**

Position "$t_1 - t_2$"				Position "$t_3 - t_4 - t_5$"			
d_1	L_n	Tolerance		d_1	L_0	Tolerance	
25 ... 50	50 ... 300	0,010 ... 0,060	$t = \frac{L_n \times 0{,}025}{125}$	25 ... 50	50 ... 100	0,004 ... 0,008	$t = \frac{L_0 \times 0{,}010}{125}$
	300 ... 500	0,060 ... 0,100			100 ... 200	0,008 ... 0,016	
	500 ... 1 000	0,100 ... 0,200			200 ... 300	0,016 ... 0,024	
63 ... 125	125 ... 300	0,020 ... 0,048	$t = \frac{L_n \times 0{,}032}{200}$	63 ... 125	50 ... 100	0,003 ... 0,006	$t = \frac{L_0 \times 0{,}012}{200}$
	300 ... 500	0,048 ... 0,080			100 ... 200	0,006 ... 0,012	
	500 ... 1 000	0,080 ... 0,160			200 ... 300	0,012 ... 0,018	

Position "$t_6 - t_7$"		Position "t_8"		Position "t_9"		Position "t_{10}"
d_1	Tolerance	D_f	Tolerance	D_1	Tolerance	Tolerance
25 ... 63	0,005	32 ... 63	0,020	32 ... 63	0,020	0,025
80 ... 125	0,006	63 ... 125	0,025	63 ... 125	0,025	
		125 ... 250	0,032	125 ... 250	0,032	

***ISO 7** - Dimensions in mm* **Table 6**

Position "$t_1 - t_2$"				Position "$t_3 - t_4 - t_5$"			
d_1	L_n	Tolerance		d_1	L_0	Tolerance	
25 ... 50	50 ... 300 300 ... 500 500 ... 1000	0,020 ... 0,120 0,120 ... 0,200 0,200 ... 0,400	$t = \frac{L_n \times 0{,}050}{125}$	25 ... 50	50 ... 100 100 ... 200 200 ... 300	0,006 ... 0,012 0,012 ... 0,025 0,025 ... 0,038	$t = \frac{L_0 \times 0{,}016}{125}$
63 ... 125	125 ... 300 300 ... 500 500 ... 1000	0,040 ... 0,094 0,094 ... 0,157 0,157 ... 0,315	$t = \frac{L_n \times 0{,}063}{200}$	63 ... 125	50 ... 100 100 ... 200 200 ... 300	0,005 ... 0,010 0,010 ... 0,020 0,020 ... 0,030	$t = \frac{L_0 \times 0{,}020}{200}$

Position "$t_6 - t_7$"		Position "t_8"		Position "t_9"		Position "t_{10}"
d_1	Tolerance	D_f	Tolerance	D_1	Tolerance	Tolerance
25 ... 63 80 ... 125	0,006 0,008	32 ... 63 63 ... 125 125 ... 250	0,025 0,032 0,040	32 ... 63 63 ... 125 125 ... 250	0,025 0,032 0,040	0,032

Radial run-out of the free ends with rigidly blocked nut

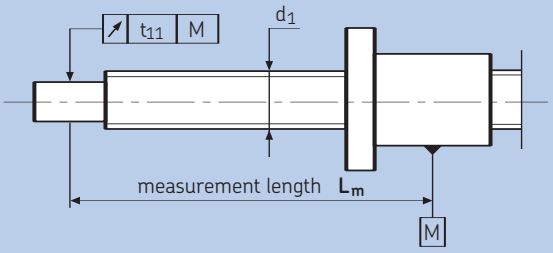

Table 7

For ISO	d_1	L_m	Tolerance "t_{11}"
1	25 ... 50	50 ... 300	0,005 ... 0,020
1	63 ... 125	100 ... 600	0,010 ... 0,035
3	25 ... 50	50 ... 300	0,006 ... 0,025
3	63 ... 125	100 ... 600	0,012 ... 0,045
5	25 ... 50	50 ... 300	0,010 ... 0,035
5	63 ... 125	100 ... 600	0,018 ... 0,055

Geometric profile of the track/ball area

Ball/track contact pressures and, therefore, axial load capacity are optimized through in depth study of the profile of the groove consisting of two gothic arcs that are in a specific ratio to the radius of the ball $D_W/2$, so as to generate the optimal contact angle α (**➔ fig. 5**).

According to the direction of the load, the ball/track contact points are at B or A.The displacement Δa of the ball from point A to point B is the effective axial play of the ball screw. Under stationary conditions, the radial play Δr of the system is related to this.

Preload

Two nuts are used forced apart according to a preload force at rest F_{pr} in order to enhance positioning accuracy, eliminating axial and radjal play, and to improve system rigidity.

Application of an external load F_A increases the load and deformation on nut 2 to the values $F_{(2)}$ and $\Delta\ell_{b/t(2)}$ while nut 1 is detensioned to the same extent. When the external load reaches the value F_ℓ = 2,83 F_{pr}, the preload is eliminated (condition of no play), (**➔ diagram 1**).

Figure 6 and **diagram 2** show the different behaviour of nuts preloaded or with play. The optimal preload depends on a wide range of application parameters and must be "purpose-designed" for more harsher uses. GAMFIOR recommends an optimal preload of maximum 12 % of the basic dynamic axial load rating C_{am}.

Preload must be defined according to the load applied and the required rigidity. With external loads F_A, the preload value that

Fig. 5

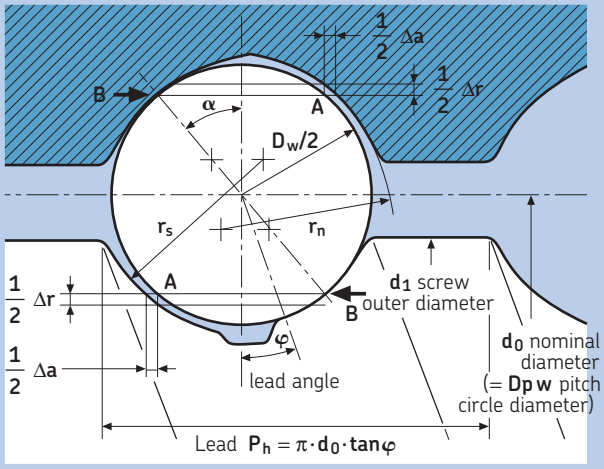

Diagram 1

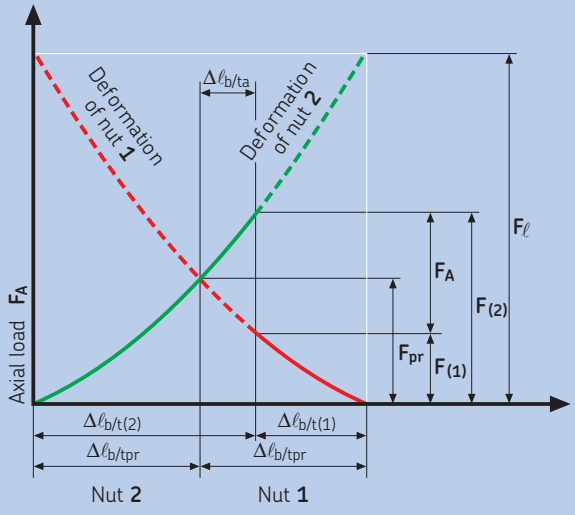

Diagram 2

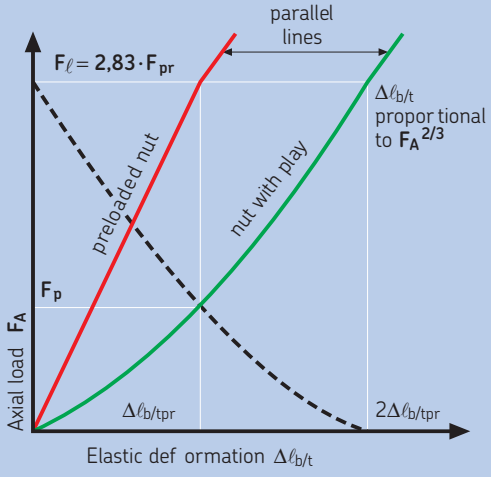

Fig. 6

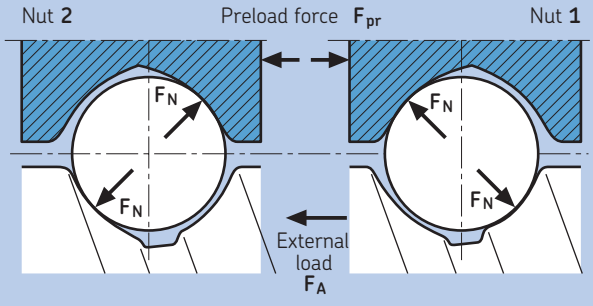

ensures conditions of no play is, as seen above, equal to $F_A/2{,}83$.

Once the ball screw has been dimensioned with the calculated required rigidity, a further increase n the preload does not lead to any very noticeable increase in rigidity (**➔ fig. 7**) but tends to reduce ball screw life due to the increase in the operating torque and in temperature.

Each time the temperature increases by one degree above 20 °C, there is an approx. 0,01 mm elongation per degree and per meter in the steel used to construct the precision ball screw.

Preloading systems

In addition to the above-mentioned system, in which two preloaded nuts are used, the single preloaded nut system can be applied by using larger-sized balls (with four contact points) or with a shift in the lead of the nut tracks.

Permissible deviations for the preload torque (ISO/DIS 3408-3 Draft Standard) **table 8** gives the maximum permissible tolerance values $\pm \Delta T_{pp}$ in % in relation to the nominal torque T_{po}; the effective values T_{pa} and $\pm \Delta T_{pa}$ measured with the procedure outlined in the paragraph above must be within this range.

Materials and thermal expansions

GAMFIOR ball screw shafts are made of particularly impuretyfree steels, able to withstand the heat treatments applied without cracking or uncontrolled deformations.

The track-ball contact area is surface-hardened by applying strictly controlled induction hardening procedures for the screw shafts and casehardening procedures for the nuts followed by deep freeze treatment (for the residual austenite) and soft tempering. Constant hardening thicknesses of ≥ 2 mm are thus obtained with hardness values of 59 ... 62 HRC.

The ends of the screws are usually hardened and tempered (R = 80 ... 90 daN/mm^2).

The thermal expansion coefficient of the screw is $K_a = 12\ 10^{-6}$/degree; the resulting axial elongation at a thermal gradient of $\Delta\theta$ [°C] is therefore:

$$\Delta\ell = K_a \cdot \Delta\theta \cdot L \text{ [mm]}$$

This should be taken into account when selecting the correct preload and lead compensation in order to obtain optimal working conditions.

Fig. 7

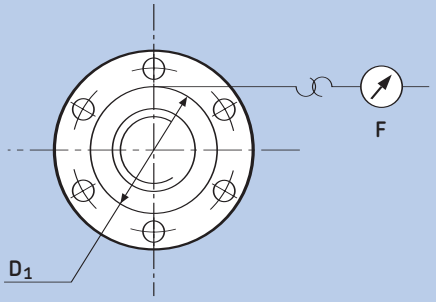

Table 8

T_{p0} [Nm]		ΔT_{pp} (% of T_{p0})											
		$L_u/d_0 < 40$; $L_u < 4000$ mm				$L_u/d_0 < 60$; $L_u < 4000$ mm				$L_u > 4000$ mm			
from	to	ISO 1	ISO 3	ISO 5	ISO 7	ISO 1	ISO 3	ISO 5	ISO 7	ISO 1	ISO 3	ISO 5	ISO 7
0,2	0,4	35	40	50	–	40	50	60	–	–	–	–	–
0,4	0,6	25	40	40	–	33	40	45	–	–	–	–	–
0,6	1	25	30	35	40	30	35	40	45	–	40	45	50
1	2,5	20	25	30	35	25	30	35	40	–	35	40	45
2,5	6,3	15	20	25	30	20	25	30	35	–	30	35	40
6,3	10	–	15	20	30	–	20	25	35	–	25	30	35

Checking of the maximum axial operating load

In low speed applications and generally speaking in all applications with high axial loads, F_{MAX} greater than the mean load F_m, even for short periods, it is advisable to make a static check on possible permanent deformations generated at the ball/track contact. Referring to the definition of C_{oa} and C_{oam}, the static load safety coefficient f_s is calculated:

$$f_s = \frac{C_{oam}}{F_{MAX}}$$

which must be kept within the following values:

f_s =
- 1 ... 1,5 regular operation without vibrations
- 1,5 ... 2 normal operation with limited vibrations
- 2 ... 3 strong shock loads and vibrations
- 3 ... 4 very smooth operating requirements

For compressive axial loads, this check must be made together with calculation of the maximum permissible column load.



Application of precision ball screw

Lubrication

Oil

Lubrication of precision ball screws has many similarities with lubrication of ball bearings, so that similar products are used. However, the conditions of accuracy in which ball screws must operate do not permit any noticeable increases in temperature; therefore, where the application allows, it is advisable to use oil lubrication which helps to disperse the heat in the track/ball contact area. Generally, the same oils are used as for ball bearings with optimal viscosity calculated according to the geometry, speed and operating temperature. The viscosity grade ISO VG [mm^2/s or Cst at 40 °C] in conformity with DIN 51519 standard can be obtained from (➔ **Diagram 3**) according to screw shaft diameter, average speed and operating temperature for the application concerned.

The amount of oil required also depends on the application conditions; an oil volume of 2 ... 5 cm^3/h is usually prescribed for each ball turn (1 impulse every 5 ... 30 min). In case of oil-immersed horizontal screws, the level of lubricant must reach the axis of the lowest ball.

In case of applications with operating conditions other than normal, oils can be used with special additives to improve stability and anti-corrosion characteristics.

Grease

In low speed operating conditions, water-resistant greases are usually used according to grade 2 DIN 51825. Greasing should be repeated for machine tools every 2-3 months in the initial operating phase and 6 ... 10 months subsequently. The amount of grease used must fill approximately half of the available internal space. Greases with a different saponifying content must never be mixed. Under exceptional circumstances of use, such as high speed or heavy loads, it is advisable to use greases conforming to DIN 51818 prescriptions, type NLGI and NLGI 3. For specific lubrication SKF should be consulted for advices.

Protective covers

GAMFIOR standard precision ball screws are supplied complete with plastic wiper rings which prevent leakage of lubricant and penetration of external impurities.

Special seals for applications in particularly dirty or contaminated environments can be designed case by case on request. A bellows or telescopic type protection is always useful in these cases.

Diagramm 3

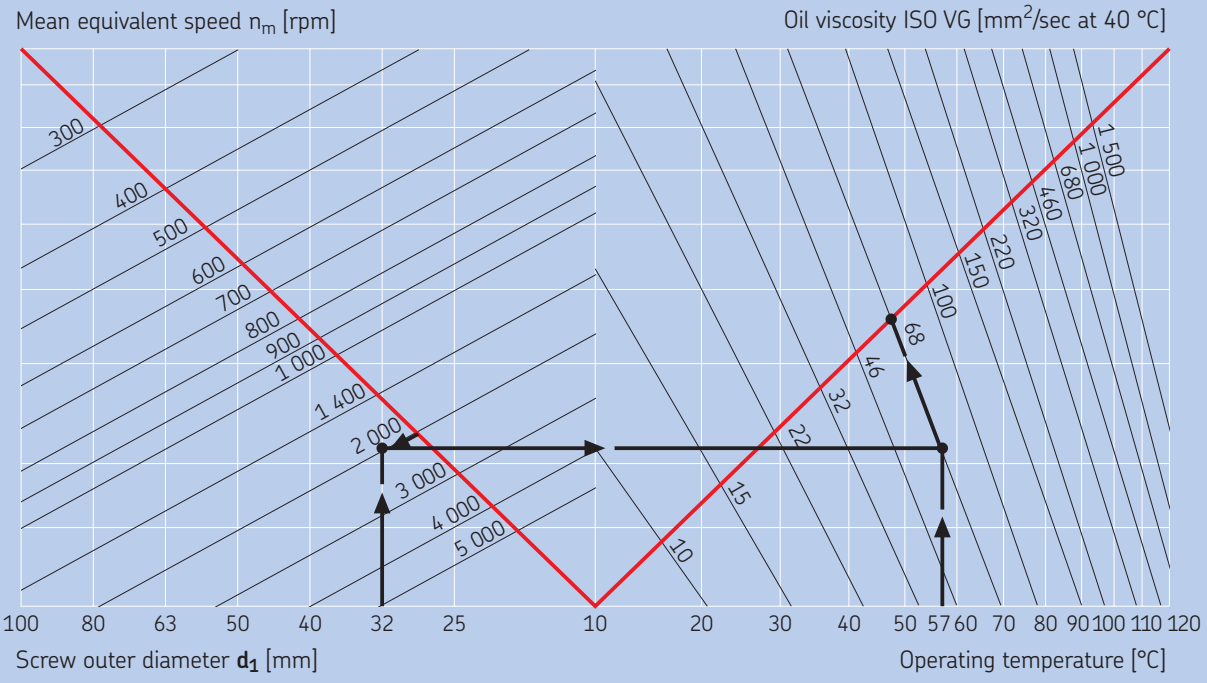

Calculation formulas

1 Dynamic load rating **(N)** and Basic life rating

$$L_{10} = \left(\frac{C_a}{F_m}\right)^3 \quad \text{or} \quad C_{req} = F_m (L_{10})^{1/3}_{req}$$

L_{10} = life (milion of revolutions)
C_a = basic dynamic load rating
C_{req} = required dynamic load rating
F_m = cubic mean load [N]

2 Cubic mean load **(N)**

$$F_m = \frac{(F_1^3 L_1 + F_2^3 L_2 + F_3^3 L_3 + \ldots)^{1/3}}{(L_1 + L_2 + L_3 + \ldots)^{1/3}}$$

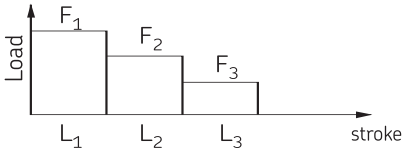

$$F_m = \frac{F_{min} + 2F_{max}}{(L_1 + L_2 + L_3 + \ldots)^{1/3}}$$

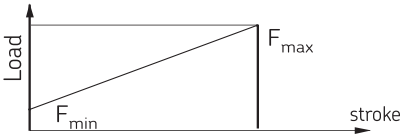

3 Critical speed of screw shaft **(rpm)** (no safety factor)
(a factor of 0,8 is generally recommended)

$$n_{cr} = 490 \cdot 10^5 \frac{f_1 \, d_2^2}{\ell^2}$$

d_2 = root diameter [mm]
ℓ = free lenght, or distance between the two support bearings

f_1 = 0,9 — fixed, free
3,8 — fixed, supported
5,6 — fixed, fixed

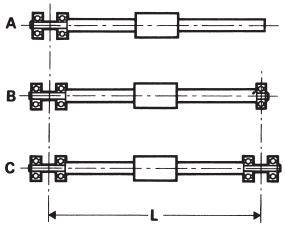

4 Speed limit of the mechanism
(maxi speed applied through very short periods - to be confirmed, depending on the application)

For instance: $n \times d_0 < 110\,000$, to the exception of long leads:
$32 \times 20/25/32 - 40 \times 40 - 50 \times 50$
and 63×50: $n \times d_0 < 70\,000$, if higher, please consult SKF

n = revolutions per minute
d_0 = screw shaft nominal diameter

5 Buckling strength **(N)**
(with a safety factor: 3)

$$F_c = \frac{34\,000 \cdot f_2 \cdot d_2^4}{\ell^2}$$

d_2 = root diameter [mm]
ℓ = free length, or distance between the two support bearings

f_2 = mounting correction factor

0,25 — fixed, free A
1 — supported, supported B
2 — fixed, supported C
4 — fixed, fixed D

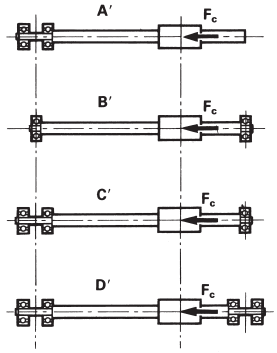

6 Deflection of the screw shaft due to its own weight **(mm)**

$$\Delta\ell_{rad} = K_p \frac{p \cdot \ell^4}{E \cdot I}$$

Distributed weight P [daN/mm]

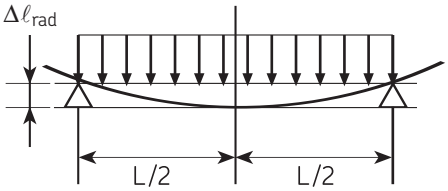

$E = 21\,000$ [daN/mm^2]

$I = \frac{\Pi}{64} d_2^4$ [mm^4]

K_p =
- 1/8 in configuration A (fixed/free) Dl_{rad} on the free end
- 5/384 in configuration B (supported/supported) Dl_{rad} on the centreline
- 1/185 in configuration C (fixed/supported) Dl_{rad} at 0,42 · L from the simple support
- 1/384 in configuration D (fixed/free) Dl_{rad} on the centreline

Intermediate supports that reduce the above deflection can be used in very long applications.

7 Rigidity
The total rigidity of a screw is:

$$R_t = \frac{F}{\delta}$$

$$\frac{1}{R_t} = \frac{1}{R_s} + \frac{1}{R_n}$$

F = load
δ = deflection
R_s = screw shaft rigidity
R_n = nut rigidity

The rigidity of a screw shaft is:
- Ball screw held rigidity at one end:

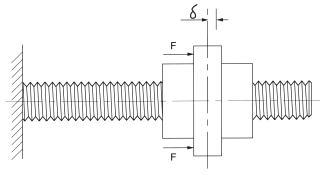

$$R_s = 165 \frac{d_2^2}{I} \text{ [Nμm]}$$

for standard steel

- Ball screw held rigidity at both ends:

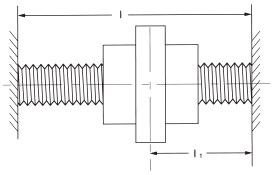

$$R_s = \frac{165\, d_2^2\, I}{I_2\,(I - I_2)}$$

for standard steel

8 Theoretical efficiency
- direct **(η)**

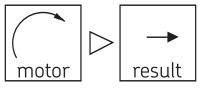

$$\eta = \frac{1}{1 + \frac{K \cdot d_0}{P_h}}$$

K = 0,00974
d_0 = nominal diameter of screw shaft
P_h = lead [mm]

- indirect **(η')**

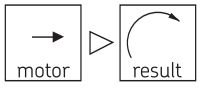

$$\eta' = 2 - \frac{1}{\eta}$$

9 Pratical efficiency **(η_p)**

$$\eta_p = \eta \cdot 0{,}9$$

The value 0,9 used is an averange value betwen the practical efficiency of a new screw and that of a properly run in screw. It should be used for industrial applications in all normal working conditions. For extreme cases, call us.

10 Input torque in a steady state **(Nm)**

$$T = \frac{F \cdot P_h}{2\,000 \cdot \pi \cdot \eta_p}$$

F = maximum load of the cycle [N]

11 Power required in a steady state **(W)**

$$P = \frac{F \cdot n \cdot P_h}{60\,000 \cdot \eta_p}$$

n = revolution per minute

12 Preload torque **(Nm)**

$$T_{pr} = \frac{F_{pr} \cdot P_h}{1\,000 \cdot \pi}\left(\frac{1}{\eta} - 1\right)$$

Fpr = preload force between a nut and the shaft [N]

13 Restraining torque **(Nm)**
(considering system backdriving)

$$T_B = \frac{F \cdot P_h \cdot \eta'}{2\,000 \cdot \pi}$$

F = load [N]
For safety, we can use the theoretical indirect efficiency

14 Nominal motor torque when accelerating **(Nm)**

For a horizontal screw

$$T_t = T_f + T_{pr} + \frac{P_h\,[F + m_L \cdot \mu_f \cdot g]}{2\,000 \cdot \pi \cdot \eta_p} + \dot{\omega}\,\Sigma I$$

For a vertical screw

$$T_t = T_f + T_{pr} + \frac{P_h\,[F + m_L \cdot g]}{2\,000 \cdot \pi \cdot \eta_p} + \dot{\omega}\,\Sigma I$$

T_f = torque from friction in support bearings [Nm]
T_{pr} = preload torque [Nm]
μ_f = coefficient of friction
η_p = real direct efficiency
$\dot{\omega}$ = angular acceleration [rad/s^2]
m_L = mass of the load [kg]
g = acceleration of gravity: 9,8 [m/s^2]
$\Sigma I = I_M + I_L + I_S + I \cdot 10^{-9}$ [kg/m^2]
$I_L = m_L \left(\frac{P_h}{2\pi}\right)^2 10^{-6}$ [kg m^2]

15 Nominal braking torque when decelerating **(Nm)**

For a horizontal screw

$$T'_t = T_f + T_{pr} + \frac{P_h \cdot \eta' \cdot [F + m_L \cdot \mu_f \cdot g]}{2\,000 \cdot \pi} + \dot{\omega}\,\Sigma I$$

For a vertical screw

$$T_t = T_f + T_{pr} + \frac{P_h \cdot \eta' \cdot [F + m_L \cdot g]}{200 \cdot \pi} + \dot{\omega}\,\Sigma I$$

η' = theoretical direct efficiency
I_M = inertia of motor [kg m^2]
I_S = inertia of screw shaft per metre [kg mm^2/m]

Note:
For additional information, please contact SKF.

Product information

Ordering key

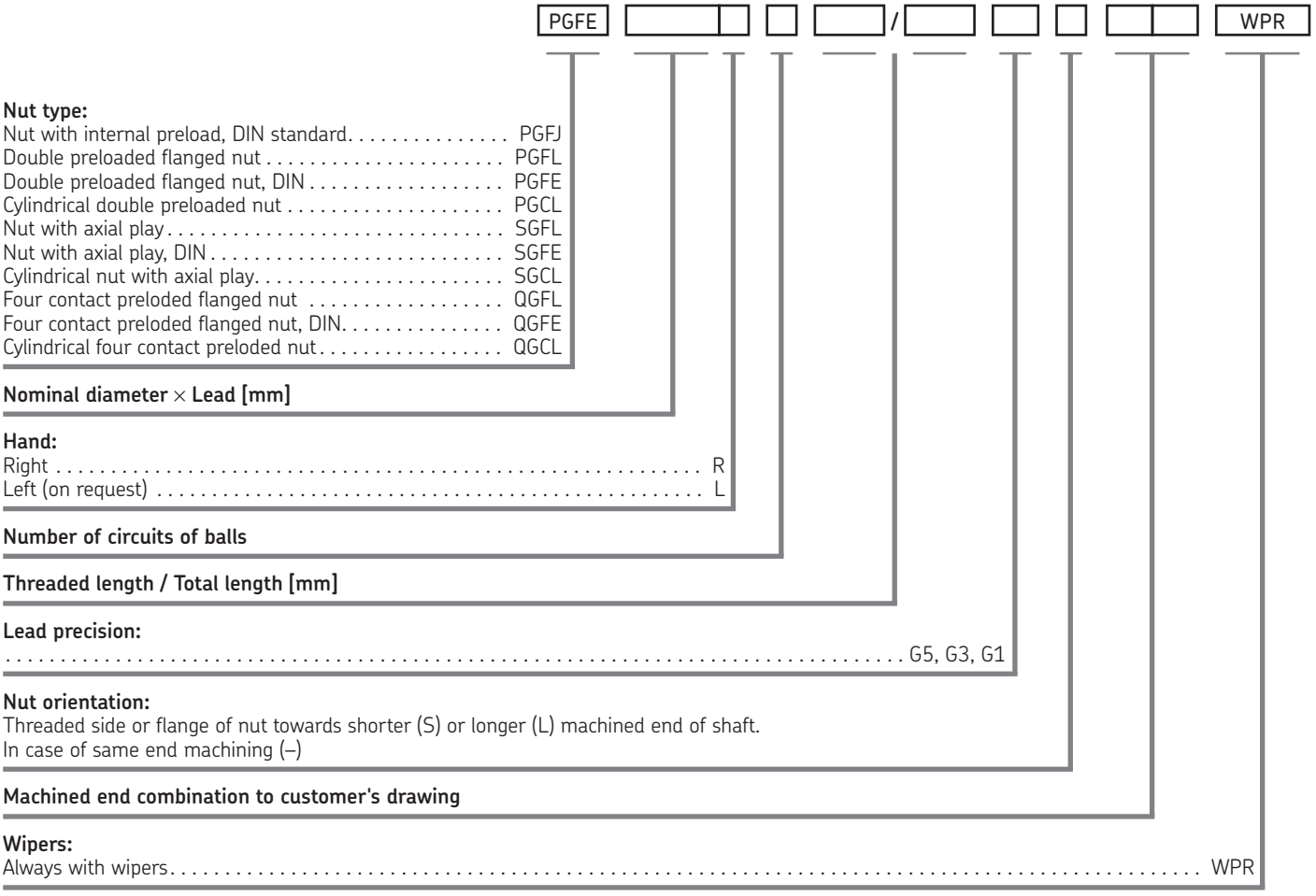

Example: PGFE | 32×5 | R | 5 | 330 / 445 | G1 | L | HA | +K | WPR

Table 1

Axial static stiffness of the nut

Actual stiffness = theoretical stiffness x accuracy factor

Accuracy factor*	**0,6**	**0,55**	**0,5**	**0,4**
ISO Accuracy classes	**1**	**3**	**5**	**7**

*Accuracy factor takes into account the effect on stiffness of dimensional errors, surface finish, nut/ball/screw shaft coupling during construction and assembly of the screw as a function of the ISO precision class

Note:
In case **L-HA+K** of "Z" (to customer's drawing) please, always send a readable DWG.

PGFJ - Flanged nut with internal preload, DIN standard

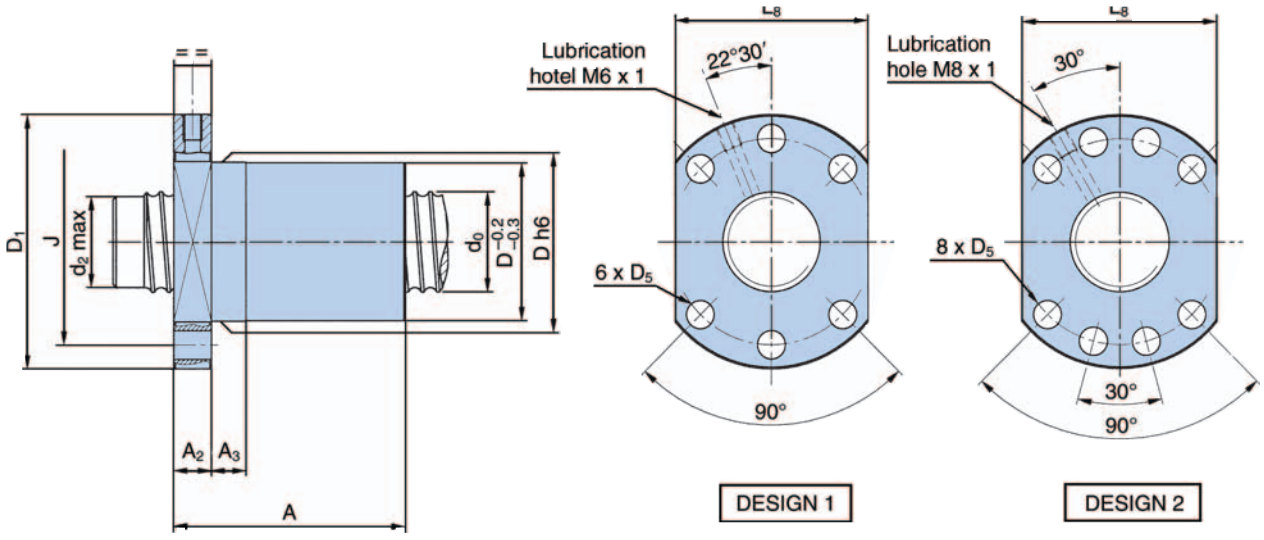

Designation	Screw diam-eter	Lead	Number of circuits of balls	Basic load ratings dynamic	static	Preload torque	Nut stiffness	d_2	D	J	Design	D_5	D_1	A	A_3	A_2	L_8
	d_0	P_h		C_a	C_{oa}	T_{pe}	R_{n*}										
	mm	mm		kN	kN	Nm	N/µm	mm	mm	mm		mm	mm	mm	mm	mm	mm
PGFJ 16×5	16	5	3×2	9,7	14,2	0,05	490	13,2	28	38	1	5,5	48	63	10	12	40
PGFJ 20×5	20	5	3×2	13,4	24,5	0,08	780	17,2	36	47	1	6,6	58	65	10	12	44
PGFJ 25×5	25	5	3×2	15,6	33,6	0,12	1 020	22,2	40	51	1	6,6	62	68	10	14	48
PGFJ 25×10	25	10	3×2	20,2	39,5	0,16	980	21,6	40	51	1	6,6	62	104	10	15	48
PGFJ 32×5	32	5	4×2	22,1	57	0,22	1 530	29,2	50	65	1	9	80	81	10	15	62
PGFJ 32×10	32	10	3×2	42,2	80	0,43	1 300	26,7	50	65	1	9	80	117	16	18	62
PGFJ 40×5	40	5	4×2	24,6	73	0,3	1 920	37,2	63	78	2	9	93	82	10	16	70
PGFJ 40×10	40	10	4×2	59,6	130	0,75	1 860	34,7	63	78	2	9	93	142	16	18	70
PGFJ 40×12	40	12	3×2	53,9	109	0,69	1 500	34,1	63	78	2	9	93	139	16	24	70
PGFJ 40×20	40	20	3×2	46	98	0,59	1 470	34,7	63	78	2	9	93	200	25	30	70
PGFJ 50×5	50	5	4×2	27,2	93	0,41	2 440	47,2	75	93	2	11	110	82	10	16	85
PGFJ 50×10	50	10	4×2	68	170	1,06	2 420	44,7	75	93	2	11	110	144	16	20	85
PGFJ 50×12	50	12	3×2	62,8	147	0,99	1 700	44,1	75	93	2	11	110	139	16	24	85
PGFJ 50×20	50	20	3×2	62,5	147	1	1 770	44,1	75	93	2	11	110	200	25	30	85
PGFJ 63×5	63	5	4×2	30	120	0,58	2 800	60,2	90	108	2	11	125	84	10	18	95
PGFJ 63×10	63	10	4×2	77,5	227	1,51	2 920	57,7	90	108	2	11	125	147	16	22	95
PGFJ 63×12	63	12	3×2	89	248	1,75	2 910	57,1	95	115	2	13,5	135	148	25	32	100
PGFJ 63×20	63	20	3×2	99	234	1,98	2 200	55	95	115	2	13,5	135	224	25	32	100
PGFJ 80×10	80	10	4×2	86	293	2,12	3 690	74,7	105	125	2	13,5	145	150	16	24	110
PGFJ 80×20	80	20	3×2	162	393	4,12	3 050	69,7	125	145	2	13,5	165	224	25	32	130

* See table 1 page 22

Options: – Balls in ceramic material
– Rotating nut

PGFL - Double preloaded flanged nut long lead

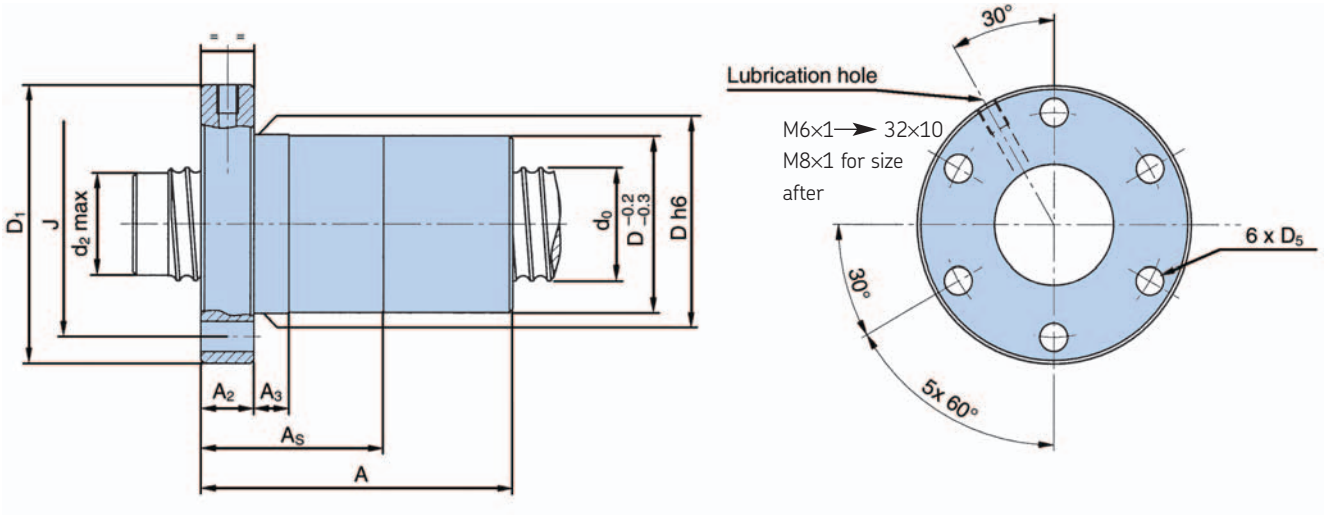

Designation	Screw diam-eter	Lead	Number of circuits of balls	Basic load ratings dynamic	static	Preload torque	Nut stiffness	d_2	D	J	D5	D_1	A Dble nut	A_s Sgle nut	A_3	A_2
	d_0	P_h		C_a	C_{oa}	T_{pe}	R_{n}**									
	mm	mm		kN	kN	Nm	N/µm	mm	mm	mm	mm	mm	mm	mm	mm	mm
PGFL 25×20	25	20	2,75	20,5	43	0,20	980	21,6	47	58	6,5	73	178	89	25	15
PGFL 25×25	25	25	2,75	20,5	43	0,20	980	21,6	47	58	6,5	73	206	103	25	15
PGFL 32×20*	32	20	2,75	30	60	0,3	900	25	55	70	8,5	88	176	86	25	18
PGFL 32×25*	32	25	2,75	29	60	0,36	900	25	55	70	8,5	88	206	97	25	18
PGFL 32×32*	32	32	1,75	19,5	41,8	0,19	600	25	55	70	8,5	88	196	91	25	22
PGFL 40×40	40	40	1,75	30,9	68,4	0,42	900	32	84	104	10,5	126	210	110	25	24
PGFL 50×50	50	50	1,8	36,5	72,8	0,3	1 220	42	90	114	10,5	135	280	130	25	24
PGFL 63×50	63	50	1,8	40	114	0,4	1 500	55	100	124	13	147	284	154	25	24

* Brush wipers & n × d0 < 70 000

** See table 1 page 22

Note:
Nut is available with axial play “SGFL”, nut length will be A_s or with contact points preload “QGFL”.

Options: – Balls in ceramic material
– Rotating nut

PGFE - Double preloaded flanged nut, DIN

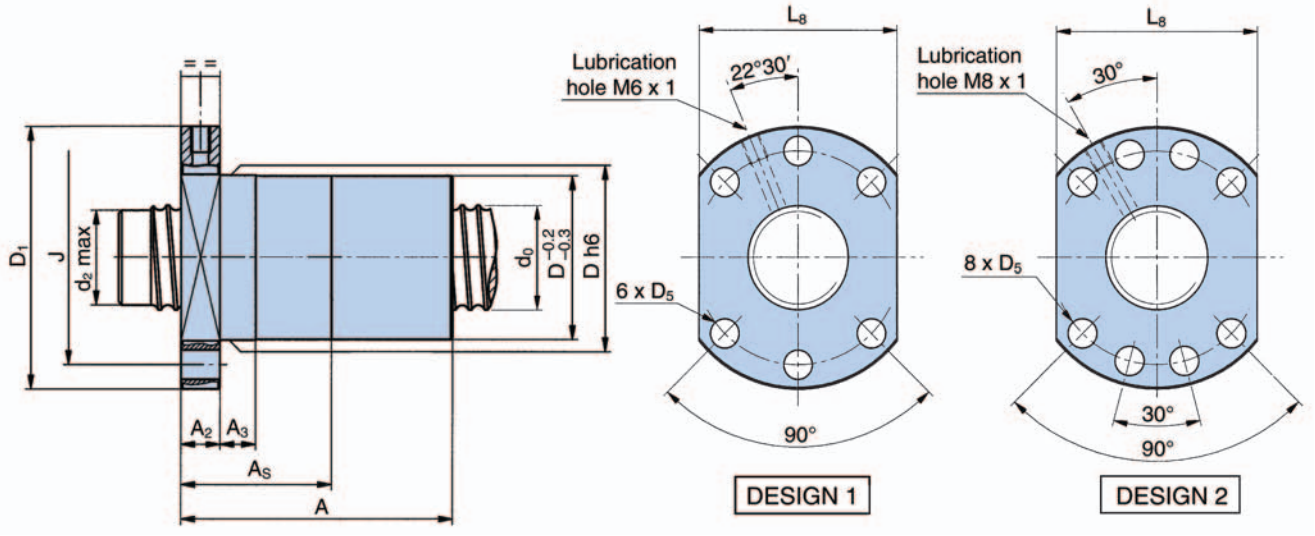

Designation	Screw diam-eter d_0	Lead P_h	Numb. of circuits of balls	Basic load ratings dynamic C_a	static C_{oa}	Preload torque T_{pe}	Nut stiff-ness R_{n*}	d_2	D	J	Design	D_5	D_1	A Dble nut	As Sgle nut	A_3	A_2	L_8
	mm	mm		kN	kN	Nm	N/µm	mm	mm	mm		mm	mm	mm	mm	mm	mm	mm
PGFE 16×5	16	5	3	9,7	14,2	0,05	490	13,2	28	38	1	5,5	48	79	45,5	10	12	40
PGFE 20×5	20	5	3	13,4	24,5	0,08	780	17,2	36	47	1	6,6	58	79	45,5	10	12	44
PGFE 25×2	25	2	4	7,8	23	0,06	600	23,8	40	51	1	6,6	62	83	49	10	15	48
PGFE 25×4	25	4	4	14,4	35	0,11	1 200	22,8	40	51	1	6,6	62	91	53	10	15	48
PGFE 25×5	25	5	3	15,6	33,6	0,12	1 020	22,2	40	51	1	6,6	62	88	51	10	14	48
PGFE 25×6	25	6	3	20,7	40,5	0,16	1 000	21,6	40	51	1	6,6	62	97	56	10	15	48
PGFE 25×10	25	10	3	20,2	39,5	0,16	980	21,6	40	51	1	6,6	62	123	69	10	15	48
PGFE 32×4	32	4	4	16,5	48	0,16	1 400	29,8	50	65	1	6,6	80	91	53	10	15	62
PGFE 32×5	32	5	3	17,3	42,8	0,17	1 200	29,2	50	65	1	9	80	89	52	10	15	62
PGFE 32×5	32	5	4	22,1	57	0,22	1 530	29,2	50	65	1	9	80	99	57	10	15	62
PGFE 32×6	32	6	3	23,3	52,5	0,23	1 240	28,6	50	65	1	9	80	97	56	10	15	62
PGFE 32×8	32	8	3	29,5	62	0,3	1 280	27,9	50	65	1	9	80	122	70	10	18	62
PGFE 32×10	32	10	3	42,2	80	0,43	1 300	26,7	50	65	1	9	80	146	82	16	18	62
PGFE 40×5	40	5	4	24,6	73	0,3	1 920	37,2	63	78	2	9	93	100	58	10	16	70
PGFE 40×6	40	6	4	33,1	89	0,41	1 450	36,6	63	78	2	9	93	110	63	10	16	70
PGFE 40×8	40	8	3	33	79	0,41	1 450	35,9	63	78	2	9	93	122	70	10	18	70
PGFE 40×10	40	10	3	46,5	98	0,59	1 480	34,7	63	78	2	9	93	146	82	16	18	70
PGFE 40×10	40	10	4	59,6	130	0,75	1 860	34,7	63	78	2	9	93	166	92	16	18	70
PGFE 40×12	40	12	3	53,9	109	0,69	1 500	34,1	63	78	2	9	93	174	99	16	24	70
PGFE 40×16	40	16	3	56	116	0,7	1 450	33,1	63	78	2	9	93	198	111	16	24	70
PGFE 40×20	40	20	3	46	98	0,59	1 470	34,7	63	78	2	9	93	224	124	25	26	70
PGFE 40×25	40	25	3	40,5	95	0,6	1 450	34	63	78	2	9	93	220	118	25	18	70
PGFE 40×30	40	30	2	35	59,4	0,51	1 050	34,7	63	78	2	9	93	170	100	25	22	70
PGFE 40×30	40	30	3	49,6	89,1	0,66	1 450	34,7	63	78	2	9	93	218	126	25	22	70

Continued

** See table 1 page 22

Note:
Nut is available with axial play “SGFE”, nut length will be A_S or with contact points preload “QGFE”.

Options: – Balls in ceramic material
– Rotating nut

PGFE

(Continued)

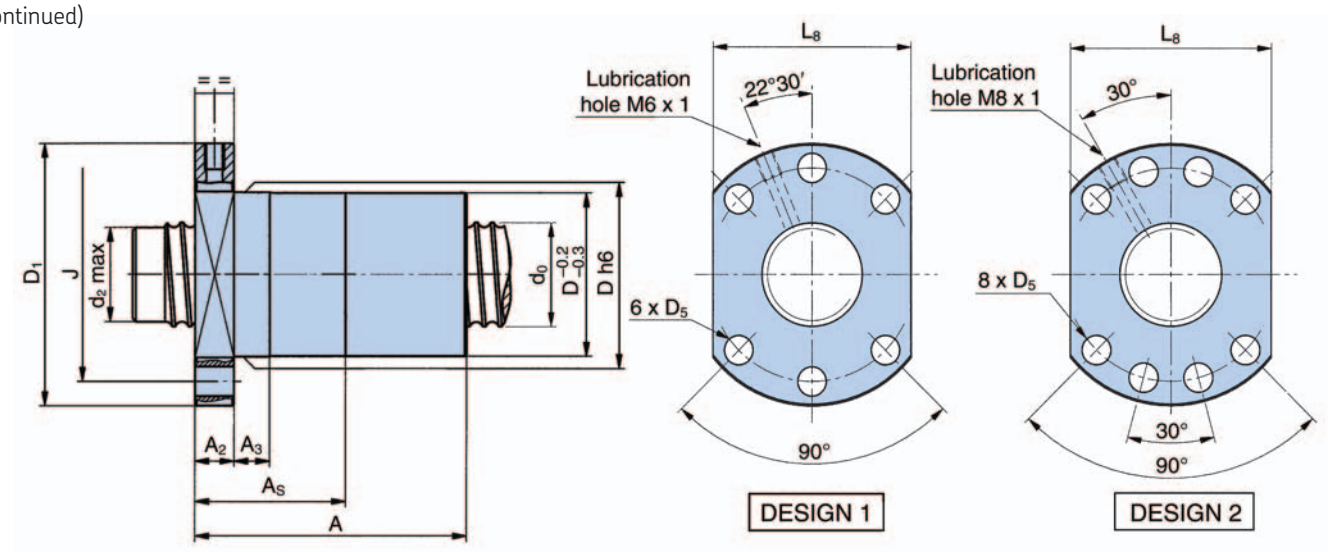

Designation	Screw diameter d_0	Lead P_h	Numb. of circuits of balls	Basic load ratings dynamic C_a	static C_{oa}	Preload torque T_{pe}	Nut stiffness R_{n*}	d_2	D	J	Design	D_5	D_1	A Dble nut	A_s Sgle nut	A_3	A_2	L_8
	mm	mm		kN	kN	Nm	N/µm	mm	mm	mm		mm	mm	mm	mm	mm	mm	mm
PGFE 50×5	50	5	4	27,2	93	0,41	2 440	47,2	75	93	2	11	110	100	58	10	16	85
PGFE 50×6	50	6	4	37	114	0,57	2 540	46,6	75	93	2	11	110	114	67	10	20	85
PGFE 50×10	50	10	4	68	170	1,06	2 420	44,7	75	93	2	11	110	168	94	16	20	85
PGFE 50×12	50	12	3	62,8	147	0,99	1 700	44,1	75	93	2	11	110	174	99	16	24	85
PGFE 50×20	50	20	3	62,5	147	0,99	1 770	44,1	75	93	2	11	110	234	132	25	30	85
PGFE 50×25	50	25	3	62,2	147	1	1 780	44,1	75	93	2	11	110	252	136	25	28	85
PGFE 50×30	50	30	3	55,5	125	0,99	1 610	44,1	75	93	2	11	110	232	130	25	28	85
PGFE 63×5	63	5	4	30	120	0,58	2 800	60,2	90	108	2	11	125	102	60	10	18	95
PGFE 63×5	63	5	6	42	180	0,81	4 000	60,2	90	108	2	11	125	122	70	10	18	95
PGFE 63×10	63	10	4	77,5	227	1,51	2 920	57,7	90	108	2	11	125	170	96	16	22	95
PGFE 63×10	63	10	6	110	345	2,15	4 080	57,7	90	108	2	11	125	210	116	16	22	95
PGFE 63×12	63	12	4	89	248	1,75	2 910	57,1	95	115	2	13,5	135	198	111	16	24	100
PGFE 63×16	63	16	3	92	256	1,99	2 400	55	95	115	2	13,5	135	211	122	16	32	100
PGFE 63×20	63	20	3	99	234	1,98	2 200	55	95	115	2	13,5	135	256	143	25	32	100
PGFE 63×25	63	25	2	69,8	190	1,4	1 700	55	95	115	2	13,5	135	292	160	25	28	100
PGFE 63×25	63	25	4	131	330	2,7	2 970	55	95	115	2	13,5	135	344	187	25	32	100
PGFE 63×30	63	30	3	99	234	1,98	2 200	55	95	115	2	13,5	135	308	168	25	28	100
PGFE 63×40	63	40	3	90,3	208	1,85	2 030	55	95	115	2	13,5	135	275	155	25	35	100
PGFE 80×10	80	10	4	86	293	2,12	3 690	74,7	105	125	2	13,5	145	172	98	16	24	110
PGFE 80×10	80	10	6	121	439	2,98	5 200	74,7	105	125	2	13,5	145	212	118	16	24	110
PGFE 80×20	80	20	3	162	393	4,12	3 050	69,7	125	145	2	13,5	165	282	157	25	32	130
PGFE 80×20	80	20	4	207	524	5,26	4 200	69,7	125	145	2	13,5	165	322	177	25	32	130
PGFE 80×12	80	12	4	101	330	2,5	3 600	74,1	110	145	2	13,5	165	200	113	16	26	130
PGFE 80×16	80	16	4	147	420	3,67	3 600	72	115	145	2	13,5	165	260	144	16	28	130
PGFE 80×25	80	25	4	146	422	3,67	3 600	72	125	145	2	13,5	165	344	187	25	32	130
PGFE 80×30	80	30	3	162	393	4,12	3 050	69,7	125	145	2	13,5	165	320	176	25	32	130
PGFE 80×40	80	40	3	162	393	4,12	3 050	69,7	125	145	2	13,5	165	410	224	25	38	130

Continued

* See table 1 page 22

Note:
Nut is available with axial play “SGFE”, nut length will be A_s or with contact points preload “QGFE”.

Options: – Balls in ceramic material
– Rotating nut

PGFE

(Continued)

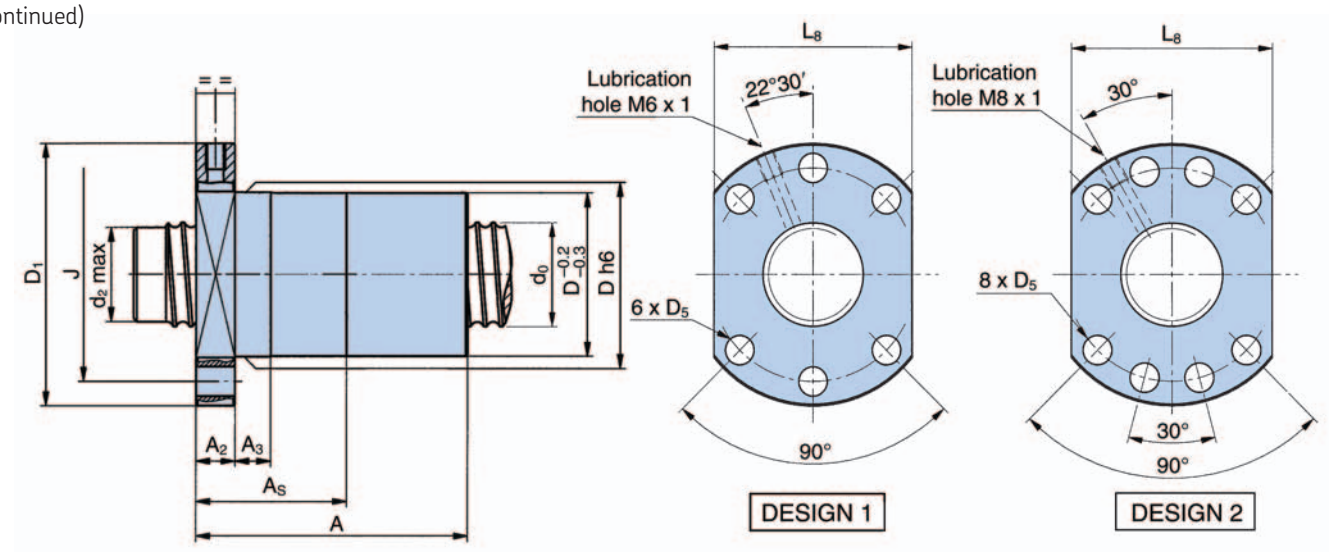

Designation	Screw diam-eter d_0	Lead P_h	Numb. of circuits of balls	Basic load ratings dynamic C_a	static C_{oa}	Preload torque T_{pe}	Nut stiff-ness R_n*	d_2	D	J	Design	D_5	D_1	A Dble nut	A_s Sgle nut	A_3	A_2	L_8
	mm	mm		kN	kN	Nm	N/µm	mm	mm	mm		mm	mm	mm	mm	mm	mm	mm
PGFE 100×10	100	10	4	100	372	3,06	4 090	94,7	125	145	2	13,5	165	176	102	16	28	130
PGFE 100×10	100	10	6	142	558	4,35	6 200	94,7	125	145	2	13,5	165	216	122	16	28	130
PGFE 100×12	100	12	4	112	425	3,4	4 300	94,1	135	159	2	17,5	183	202	115	16	28	140
PGFE 100×12	100	12	6	158	633	4,8	6 000	94,1	135	159	2	17,5	183	250	139	16	28	140
PGFE 100×16	100	16	4	162	532	5,02	4 400	92	135	159	2	17,5	183	260	144	16	28	140
PGFE 100×20	100	20	3	184	514	5,78	3 650	89,7	150	176	2	17,5	202	288	163	25	38	155
PGFE 100×20	100	20	4	235	685	7,38	4 900	89,7	150	176	2	17,5	202	328	183	25	38	155
PGFE 100×40	100	40	3	177,5	491	5,64	3360	89,7	150	176	2	17,5	202	410	224	25	38	155
PGFE 125×12	125	12	3	96	402	3,67	3 860	119,1	165	189	2	17,5	213	182	107	16	32	170
PGFE 125×12	125	12	6	174	803	6,65	7 000	119,1	165	189	2	17,5	213	254	143	16	32	170
PGFE 125×16	125	16	4	182	696	7	4 300	117	165	189	2	17,5	213	264	148	16	32	170
PGFE 125×20	125	20	3	210	684	8,16	4 830	114,7	170	196	2	17,5	222	288	163	25	38	175
PGFE 125×20	125	20	4	269	910	10,45	6 100	114,7	170	196	2	17,5	222	328	183	25	38	175
PGFE 125×30	125	30	4	269	912	10,05	5 600	114,7	170	196	2	17,5	222	430	234	25	38	175
PGFE 125×40	125	40	3	207	672	8,16	4 310	114,7	170	196	2	17,5	222	410	224	25	38	175

* See table 1 page 22

Note:
Nut is available with axial play “SGFE”, nut length will be A_s or with contact points preload “QGFE”.

Options: – Balls in ceramic material
– Rotating nut

PGCL - Cylindrical double preloaded nut

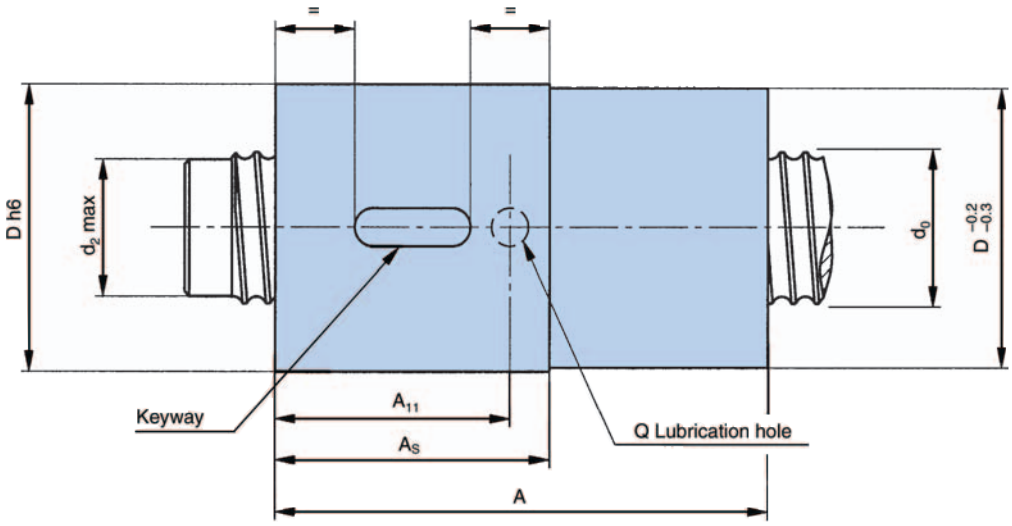

Designation	Screw diam-eter	Lead	Numb. of circuits of balls	Basic load ratings dynamic	static	Preload torque	Nut stiffness	d_2	D	Keyway	A Dble nut	A_s Sgle nut	A_{11}	Lub. diameter Q
	d_0	P_h		C_a	C_{oa}	T_{pe}	R_{n*}							
	mm	mm		kN	kN	Nm	N/µm	mm	mm	mm	mm	mm	mm	mm
PGCL 16×5	16	5	3	9,7	14,2	0,05	490	13,2	28	4×2,5×14	73	39,5	30,2	3
PGCL 20×5	20	5	3	13,4	24,5	0,08	780	17,2	36	4×2,5×14	73	39,5	30,2	3
PGCL 25×2	25	2	4	7,8	23	0,06	600	23,8	40	4×2,5×20	75	41	31	1,5
PGCL 25×4	25	4	4	14,4	35	0,11	1 200	22,8	40	4×2,5×20	83	45	33	2,5
PGCL 25×5	25	5	3	15,6	33,6	0,12	1 020	22,2	40	4×2,5×20	81	44	33	3
PGCL 25×6	25	6	3	20,7	40,5	0,16	1 000	21,6	40	4×2,5×25	89	48	36,5	4
PGCL 25×10	25	10	3	20,2	39,5	0,16	980	21,6	40	4×2,5×25	115	61	49,7	4
PGCL 32×4	32	4	4	16,5	48	0,16	1 400	29,8	50	4×2,5×20	83	45	33	2,5
PGCL 32×5	32	5	3	17,3	42,8	0,17	1 200	29,2	50	4×2,5×20	81	44	33	3
PGCL 32×5	32	5	4	22,1	57	0,22	1 530	29,2	50	4×2,5×25	91	49	38	3
PGCL 32×6	32	6	3	23,3	52,5	0,23	1 240	28,6	54	4×2,5×25	89	48	36,5	4
PGCL 32×8	32	8	3	29,5	62	0,3	1 280	27,9	53	4×2,5×25	112	60	46,5	4,5
PGCL 32×10	32	10	3	42,2	80	0,43	1 300	26,7	54	4×2,5×25	138	74	58	6,2
PGCL 40×5	40	5	4	24,6	73	0,3	1 920	37,2	63	6×3,5×25	91	49	38	3
PGCL 40×6	40	6	3	25,8	66,9	0,32	1 130	36,6	63	6×3,5×25	89	48	36,5	4
PGCL 40×6	40	6	4	33,1	89	0,41	1 450	36,6	63	6×3,5×25	101	54	42,5	4
PGCL 40×8	40	8	3	33	79	0,41	1 450	35,9	63	6×3,5×25	112	60	46,5	4,5
PGCL 40×10	40	10	3	46,5	98	0,59	1 480	34,7	63	6×3,5×32	138	74	58	6,2
PGCL 40×10	40	10	4	59,6	130	0,75	1 860	34,7	63	6×3,5×32	158	84	69	6,2
PGCL 40×12	40	12	3	53,9	109	0,69	1 500	34,1	63	6×3,5×32	162	87	68,5	7
PGCL 40×20	40	20	3	46	98	0,59	1 470	34,7	63	6×3,5×32	218	118	95,6	7
PGCL 50×5	50	5	4	27,2	93	0,41	2 440	47,2	72	6×3,5×25	91	49	38	3
PGCL 50×6	50	6	4	37	114	0,57	2 540	46,6	72	6×3,5×25	101	54	43	4
PGCL 50×10	50	10	3	53	128	0,82	1 890	44,7	72	6×3,5×32	138	74	69	6,2
PGCL 50×10	50	10	4	68	170	1,06	2 420	44,7	72	6×3,5×32	158	84	68,5	6,2
PGCL 50×12	50	12	3	62,8	147	0,99	1 700	44,1	75	6×3,5×32	162	87	58	7
PGCL 50×20	50	20	3	62,5	147	0,99	1 770	44,1	75	6×3,5×32	222	120	97	7

* See table 1 page 22

Continued

Note:
Nut is available with axial play "SGCL", nut length will be A_s or with contact points preload "QGCL".

Options: – Balls in ceramic material
– Rotating nut

PGCL
(Continued)

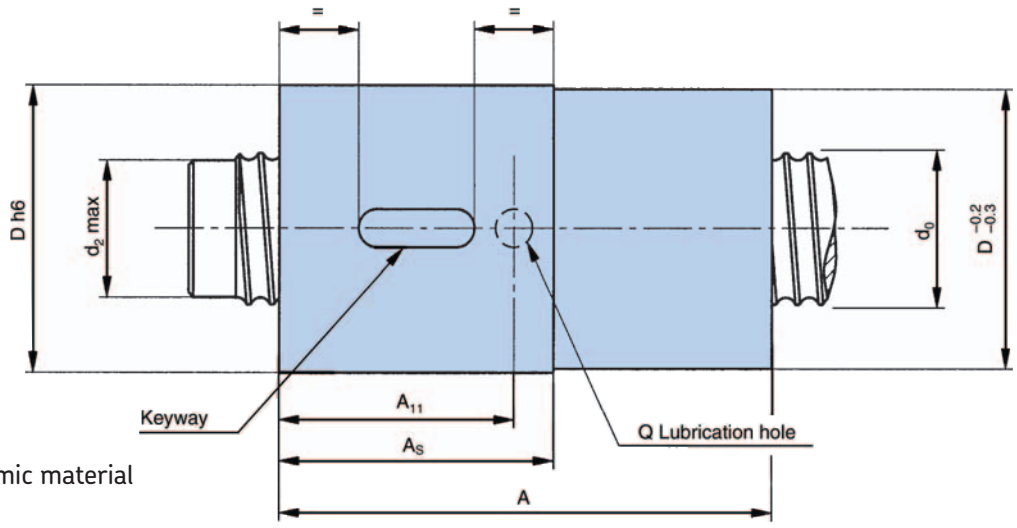

Options: – Balls in ceramic material
– Rotating nut

Designation	Screw diameter d_0	Lead P_h	Numb. of circuits of balls	Basic load ratings dynamic C_a	Basic load ratings static C_{oa}	Preload torque T_{pe}	Nut stiffness R_{n*}	d_2	D	Keyway	A Dble nut	A_s Sgle nut	A_{11}	Lub. diameter Q
	mm			kN		Nm	N/µm	mm						
PGCL 63×5	63	5	4	30	120	0,58	2 800	60,2	90	6×3,5×25	91	49	37,5	3
PGCL 63×5	63	5	6	42	180	0,81	4 000	60,2	90	6×3,5×32	111	59	47,5	3
PGCL 63×10	63	10	4	77,5	227	1,51	2 920	57,7	90	8×4×32	158	84	69	6,2
PGCL 63×10	63	10	6	110	345	2,15	4 080	57,7	90	8×4×40	198	104	88	6,2
PGCL 63×12	63	12	4	89	248	1,75	2 910	57,1	95	8×4×32	186	99	82	7
PGCL 63×20	63	20	3	99	234	1,98	2 200	55	95	8×4×40	248	135	108,5	9,5
PGCL 63×30	63	30	3	99	234	1,98	2 200	55	95	8×4×40	295	155	132,5	9,5
PGCL 80×10	80	10	4	86	293	2,12	3 690	74,7	105	8×4×32	158	84	69	6,2
PGCL 80×10	80	10	6	121	439	2,98	5 200	74,7	105	8×4×40	198	104	88	6,2
PGCL 80×12	80	12	4	101	330	2,5	3 600	74,1	110	8×4×32	186	99	81,5	7
PGCL 80×16	80	16	4	147	420	3,67	3 600	72	115	8×4×40	248	132	108	9,5
PGCL 80×20	80	20	3	162	393	4,12	3 050	69,7	125	8×4×40	270	145	114	12,5
PGCL 80×20	80	20	4	207	524	5,26	4 200	69,7	125	8×4×40	310	165	136,5	12,5
PGCL 80×40	80	40	3	162	393	4,19	3 050	69,7	125	8×4×40	410	224	136,5	12,5
PGCL 100×10	100	10	4	100	372	3,06	4 090	94,7	125	10×5×32	158	84	69	6,2
PGCL 100×10	100	10	6	142	558	4,35	6 200	94,7	125	10×5×40	198	104	88	6,2
PGCL 100×12	100	12	4	112	425	3,4	4 300	94,1	135	10×5×32	186	99	81,5	7
PGCL 100×12	100	12	6	158	633	4,8	6 000	94,1	135	10×5×40	234	123	105	7
PGCL 100×16	100	16	4	162	532	5,02	4 400	92	135	10×5×40	248	132	108	9,5
PGCL 100×20	100	20	3	184	514	5,78	3 650	89,7	150	10×5×40	270	145	114	12,5
PGCL 100×20	100	20	4	235	685	7,38	4 900	89,7	150	10×5×40	310	165	136,5	12,5
PGCL 100×40	100	40	3	177,5	491	5,64	3 360	89,7	150	10×5×40	410	224	136,5	12,5
PGCL 125×12	125	12	3	96	402	3,67	3 860	119,1	165	10×5×32	162	87	68,5	7
PGCL 125×12	125	12	6	174	803	6,65	7 000	119,1	165	10×5×40	234	123	105	7
PGCL 125×16	125	16	4	182	696	7	4 300	117	165	10×5×40	248	132	108	9,5
PGCL 125×20	125	20	3	210	684	8,16	4 830	114,7	170	10×5×40	270	145	114	12,5
PGCL 125×20	125	20	4	269	910	10,45	6 100	114,7	170	10×5×40	310	165	136,5	12,5
PGCL 125×40	125	40	3	207	671	8,11	4 310	114,7	170	10×5×40	410	224	136,5	12,5

* See table 1 page 22

Standard end machined

Standard end machining for nominal diameter ≥ 16 mm
Standard shaft ends for ball screws, nominal diameter ≥ 16 mm, have been developed to suit the SKF thrust bearings. These standard ends are the same for all screw types.

Dimensions (mm)

Size d_0	d_5	d_4	d_{10}	d_{11}	d_{12}	B_1	B_2	B_3	B_4	B_5	B_6	B_7	B_9	d_8	G	G1	m	d_6	c	c_1	b_a	d_7	r_a	Keyway to DIN 6885 a^{N9} xi xb	
	h7	h6		h6	h7	js12		js12	js12	H11	js12				6g		+0,14 +0	h11[5] h12[6]				h11		fixed end (type 2A)	free end (type 5A)
16	8	10	/	10	8	53	16	13	69	10	29	2	0	12,5	M10×0,75	17	1,1	9,6	0,5	0,5	1,2	8,8	0,4	A2×2×12	A2×2×12
20	10	12	/	10	8	58	17	13	75	10	29	2	0	14,5	M12×1	18	1,1	9,6	0,5	0,5	1,5	10,5	0,8 0,4[7]	A3×3×12	A2×2×12
25	15	17	/	17	15	66	30	16	96	13	46	4,5	0	20	M17×1	22	1,1	16,2	0,5	0,5	1,5	15,5	0,8 0,4[7]	A5×5×25	A5×5×25
32	17	20	/	17	15	69	30	16	99	13	46	4,5	0	21,7	M20×1	22	1,1	16,2	0,5	0,5	1,5	18,5	1,2 0,8[7]	A5×5×25	A5×5×25
40	25	30	/	30	25	76	45	22	121	17,5	67	4,5	0	33,5	M30×1,5	25	1,6	28,6	1	0,5	2,3	27,8	0,8 0,4[7]	A8×7×40	A8×7×40
50	30	35	/	30	25	84	55	22	139	17,5	67	4,5	0	35,5	M35×1,5	27	1,6	28,6	1	0,5	2,3	32,8	1,2 0,8[7]	A8×7×45	A8×7×40
63	40	50	/	45	40	114	65	28	179	20,75	93	3	0	54	M50×1,5	32	1,85	42,5	1,5	1	2,3	47,8	1,2 0,8[7]	A12×8×50	A12×8×50
80	50	55	/	45	40	119	75	28	194	20,75	93	3	0	54	M55×2	32	1,85	42,5	1,5	1	3	52,1	1,6 0,8[7]	A14×9×63	A12×8×50

[5] For screw d_0 16 to d_0 32; [6] For screw d_0 40 to d_0 63; [7] For ends 4A or 5A; 0 No shoulder; / No shoulder

Shaft end combinations

Ø ≥ 16 mm

Order code	Two machined ends
AA (without length indication)	cut only
BA	1A + 2A
FA*	2A + 2A
GA*	2A + 3A
HA	2A + 4A
JA	2A + 5A
MA	3A + 5A
SA (+ length)	Ends to root diameter d_2, any possible lengths.
UA■ (+ length)	End machined to diameter d_3 under induction hardening, any possible lengths.
K	Keyway
Z	To customer's drawing

* Attention! This mounting requires the greatest precautions. Please contact us.

Standard machined ends for nominal diameter ≥ 16 mm
Threaded length = total length - end length

1A

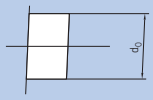

2A

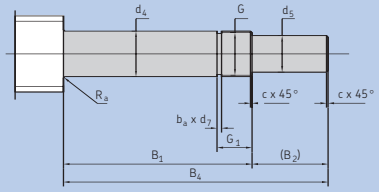

3A

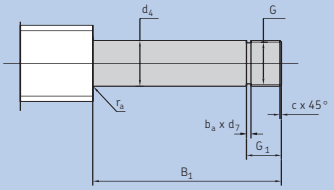

4A

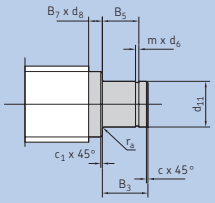

5A

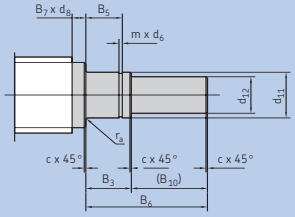

Keyway



End length

4

End bearings

A special design for a specific application
High-precision Single Direction Angular Contact Thrust Ball Bearings have been developed especially for the support of ball and roller screws in machine tools. They incorporate a large number of balls and have a special internal design with a contact angle of 60° to provide superior axial stiffness. These bearings also have high axial load ratings, high running accuracy together with speed and acceleration capability and low frictional torque.

Ready to mount units
To simplify and speed up mounting, complete greased-for-life cartridge units are available in matched sets of two, three or four Single Direction Angular Contact Thrust Ball Bearings in a flanged housing. These units are sealed and due to the flange can be simply bolted to the machine frame.

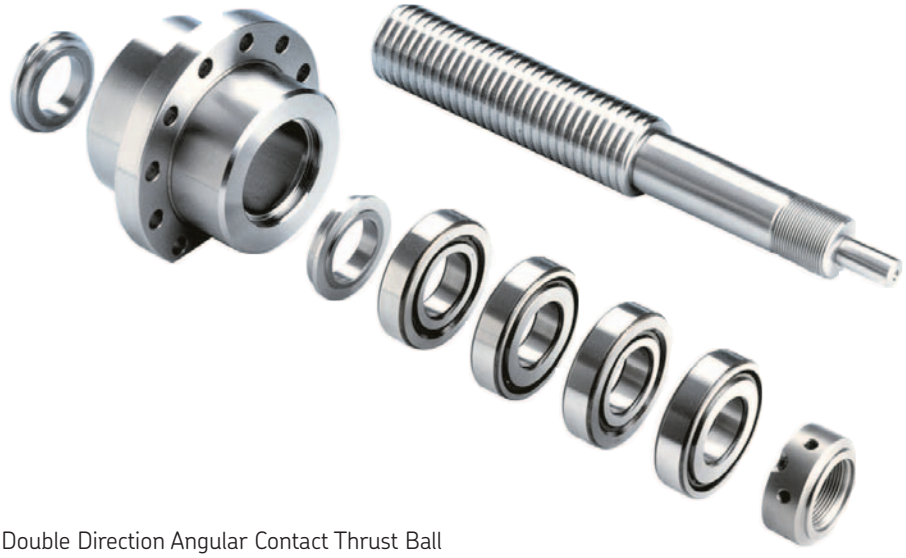

Double Direction Angular Contact Thrust Ball Bearings with and without integrated flange, sealed and greased for life are also a part of the product range.

Note:
For other informations on the products please consult Gamfior.

Product inspection and certification

Final certification of standard testing

The certificate of conformity gives the geometric parameters measured and compared with Gamfior specifications as set forth on pages above.

The radial run-out of the free ends of the screw with the ball nut rigidly fixed can also be certified.

Final certification of special inspection provided on request

a Measuring and plotting of the dynamic preload drag torque according to ISO/DIS 3408-3 specifications or according to special customer requests (➔ **fig. 1**).

b Measuring and plotting of actual travel variation compared with permissible value, using computer controlled laser systems (➔ **fig. 2**).

c Measuring and plotting of nut axial rigidity according to ISO/DIS 3408-3 specifications (➔ **fig. 3**).

d The very low speed rotation torque can be measured and plotted, if specifically requested, in order to assess the "stick-slip" of the ball screw.

	BALL SCREWS PRELOAD TORQUE TEST CERTIFICATE ACCURACY CLASS ISO 3				Customer	GAMFIOR drawing VS 404211	No. 40949 / 2586
					Customer drawing 171.892.3	Serial No. 113047	Date 05/03/03 17.31.20
GAMFIOR S.p.A. TORINO - ITALY	Screw Diameter 40 mm	Lead 5 mm	Ball Diameter 0/ -2/1 mm	Thread length 636 mm	Preload daN	Torque with wiper seals ☒	Torque without wiper seals ☐

T_{po} = Specified preload torque — 0 Nm — Max : 0,56 Nm — Min: 0,05 Nm

T_{pa} = Mean preload torque measured — 0,17 Nm — 0,18 Nm

ΔT_{pp} = Permissed deviation — ± 0,08 Nm

ΔT_{pa} = Actual deviation — ± 0,05 Nm — ± 0,05 Nm

L_u = Useful travel or measured travel 513 mm

Recording speed 10 min^{-1}

Lubrication GREASE ISOFLEX TOPAS AK 50

PRODUCTION INSPECTION

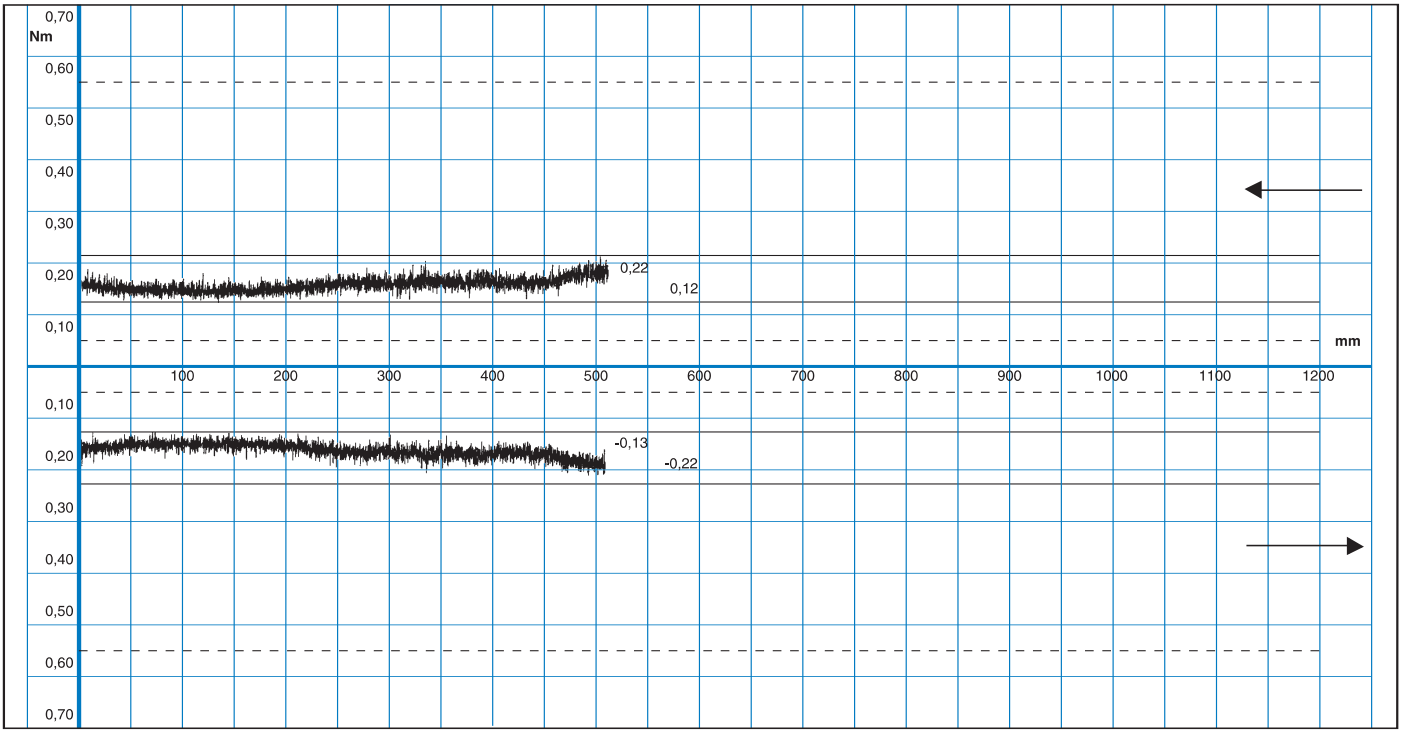

GAMFIOR S.p.A. TORINO - ITALY	BALL SCREWS RIGIDITY CARTIFICATE ACCURACY CLASS ISO 3			Customer	GAMFIOR drawing VS 404211	No. 40949 / 2586
				Customer drawing 171.892.3	Serial No. 113047	Date 05/03/03 17.31.20
	Screw Diameter 40 mm	Lead 5 mm	Ball Diameter 3,5 mm	Required Rigidity 90/ 150 daN/ µm	PRODUCT INSPECTION	

Preload F_{pr} ..... 100 daN

$F_1 = 0{,}5 \times F_{pr}$ ..... 50 daN

$F_2 = 2 \times F_{pr}$ ..... 200 daN

$\Delta\lambda_1$ = 1,004 µm

$\Delta\lambda_2$ = 3,889 µm

are the sum of the elastic deformations in the two directions caused respectively by the axial loads $\pm F_1$ e $\pm F_2$

Rigidity in the range $\pm F_1$

$$R_{nu1} = \frac{2F_1}{\Delta\lambda_1} = \text{99,6 daN/ µm}$$

Rigidity in the range $+F_1$ to $+F_2$ and $-F_1$ to $-F_2$

$$R_{nu2} = \frac{2(F_2-F_1)}{\Delta\lambda_2 - \Delta\lambda_1} = \text{104,0 daN/ µm}$$

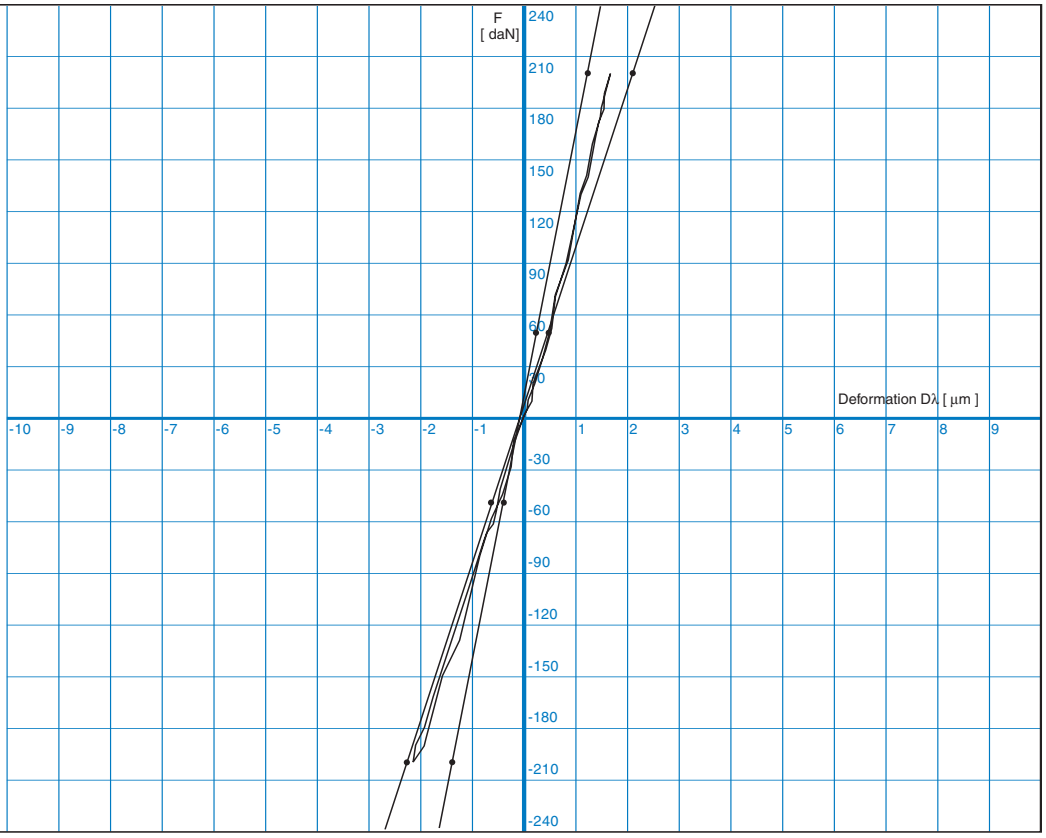

4

GAMFIOR S.p.A. TORINO - ITALY	BALL SCREWS TRAVEL DEVIATION PLOT ACCURACY CLASS ISO 3					Customer	GAMFIOR drawing VS 404211	No. 40949 / 2586
						Customer drawing 171.892.3	Serial No. 113047	Date 05/03/03 17.31.20
	Screw Diameter 40 mm	Lead 5 mm	Ball Diameter 3,175 mm	Useful travel 600 mm	Thread length 685 mm	PRODUCT INSPECTION		

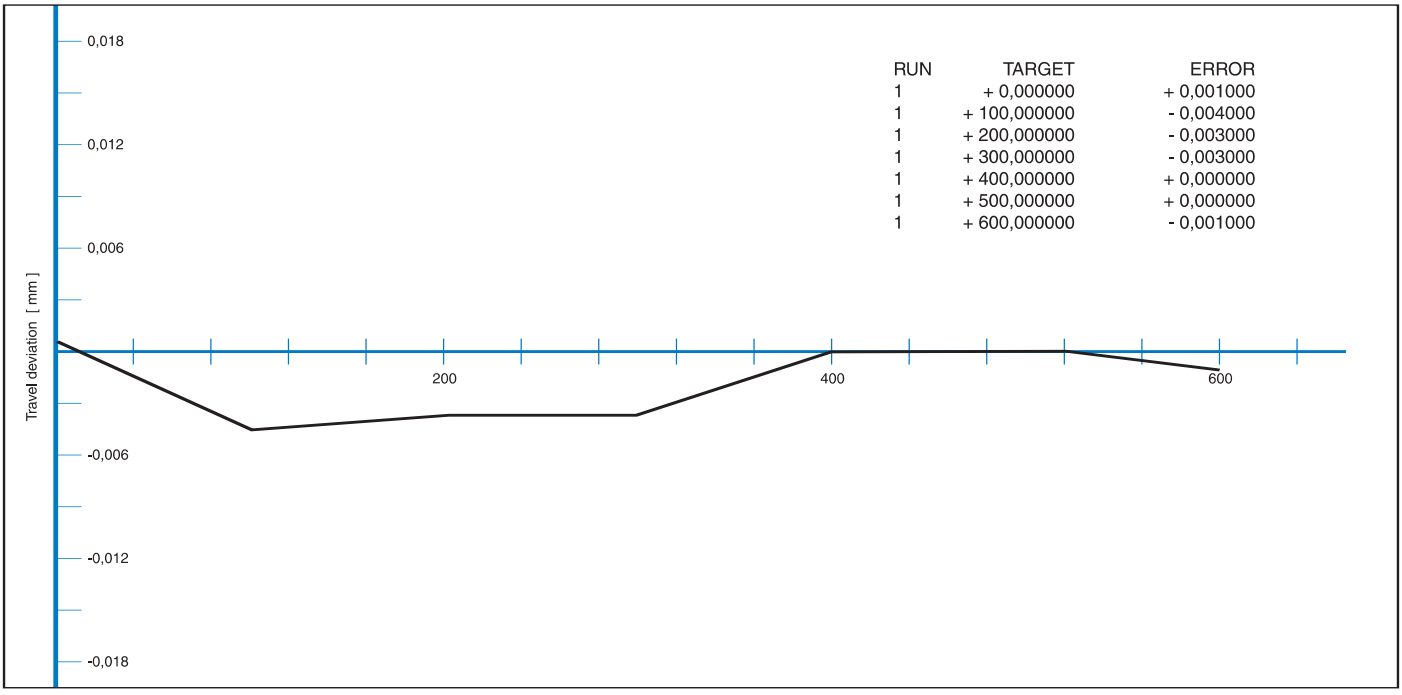

RUN	TARGET	ERROR
1	+ 0,000000	+ 0,001000
1	+ 100,000000	- 0,004000
1	+ 200,000000	- 0,003000
1	+ 300,000000	- 0,003000
1	+ 400,000000	+ 0,000000
1	+ 500,000000	+ 0,000000
1	+ 600,000000	- 0,001000

This catalogue concerns only ground ball screws.
However, a ground ball screw may not meet all the demands of your application; in this case choose a roller screw as roller screws perform beyond the limits of ball screws.

How to orientate your choice

In our wide range, you are sure to find the product which fits exactly your requirements:

- The miniature ball screws (➔ **fig. 1**), either with ball recirculation by integrated tube or with inserts, are very compact. Backdriving makes them highly efficient.
- The rolled screws (➔ **fig. 2**) enable you to select the right level of requirement: simple transport screws, very fast screws with long lead, or preloaded screws for more precision.
- Ground ball screws for more rigidity and precision (➔ **fig. 3**).
- High load capacity ball screws with BIG BALLS (➔ **fig. 4**) for moulding injection, punching, bending press machines and direct hydraulic cylinder replacements.
- Roller screws (➔ **fig. 5**) which are far beyond the limits of any ball screws as for heavy loads, ultimate precision and rigidity, high speed and acceleration and very difficult environments.

Table 1 will guide you in your first approach.

Fig. 1



Fig. 2

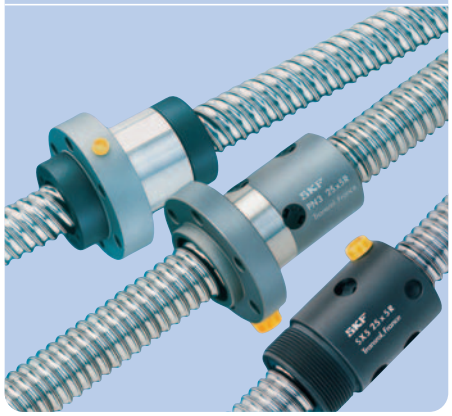

Fig. 3

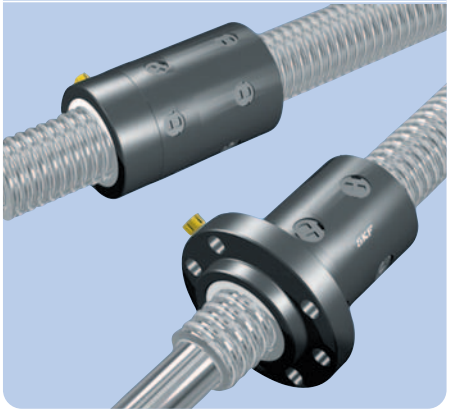

Fig. 4



Fig. 5

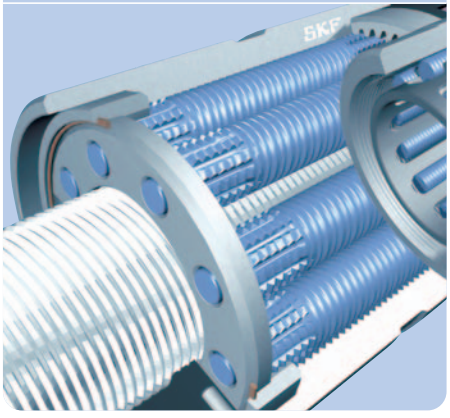

Table 1

Type	Details	Basic dynamic load rating	Precision Ep (µ) on 300 mm	High duty cycles	Adverse environment (Spec. steel, pollution)
	**SH series** Diameter Ø 6 to 16 mm	Up to 5,2 kN	G9 (130 µ) to G5 (23 µ)		good
	**SX, SL/TL, SN/TN/PN** Din standard Ø 16 to 63 mm	Up to 80 kN	G9 (130 µ) to G5 (23 µ)		satisfactory
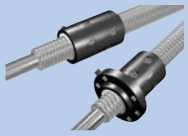	**PGFJ, PGFL, PGFE, PGCL** Ø 16 to 125 mm	Up to 270 kN	G5 (23 µ) to G1 (6 µ)		satisfactory
	**SGFH,** Ø 50 to 125 mm	Up to 850 kN	G5 (23 µ) to G1 (6 µ)		exceptional
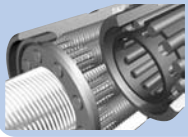	**SRC, SRF, TRK/PRK, SVC, PVK** Ø 8 to 210 mm	Up to 2235 kN	G5 (23 µ) to G1 (6 µ)		exceptional

4

SKF – the knowledge engineering company

The business of the SKF Group consists of the design, manufacture and marketing of the world's leading brand of rolling bearings, with a global leadership position in complementary products such as radial seals. SKF also holds an increasingly important position in the market for linear motion products, high precision aerospace bearings, machine tool spindles, plant maintenance services and is an established producer of high-quality bearing steel.

The SKF Group maintains specialized businesses to meet the needs of the global marketplace. SKF supports specific market segments with ongoing research and development efforts that have led to a growing number of innovations, new standards and new products.

SKF Group has global ISO 14001 environmental certification. Individual divisions have been approved for quality certification in accordance with either ISO 9000 or appropriate industry specific standards.

Some 80 manufacturing sites worldwide and sales companies in 70 countries make SKF a truly international corporation. In addition, our 7 000 distributor and dealer partners around the world, e-business marketplace and global distribution system put SKF close to customers for the supply of both products and services. In essence, SKF solutions are available wherever and whenever our customers need them.

Overall, the SKF brand now stands for more than ever before. It stands for the knowledge engineering company ready to serve you with world-class product competences, intellectual resources and the vision to help you succeed.



Harnessing wind power
The growing industry of wind-generated electric power provides an environmentally compatible source of electricity. SKF is working closely with global industry leaders to develop efficient and trouble-free turbines, using SKF knowledge to provide highly specialized bearings and condition monitoring systems to extend equipment life in the extreme and often remote environments of wind farms.

Developing a cleaner cleaner
The electric motor and its bearings are the heart of many household appliances. SKF works closely with appliance manufacturers to improve their product's performance, cut costs and reduce weight. A recent example produced a new generation of vacuum cleaners with substantially more suction. SKF's knowledge in small bearing technology is also applied to manufacturers of power tools and office equipment.





Delivering asset efficiency optimization
To optimize efficiency and boost productivity, many industrial facilities outsource some or all of their maintenance services to SKF, often with guaranteed performance contracts. Through the specialized capabilities and knowledge available fromSKF Reliability Systems, SKF provides a comprehensive range of asset efficiency services, from maintenance strategies and engineering assistance, to operator-driven reliability and machine maintenance programs.



Creating a new "cold remedy"
In the frigid winters of northern China, sub-zero temperatures can cause rail car wheel assemblies and their bearings to seize due to lubrication starvation. SKF created a new family of synthetic lubricants formulated to retain their lubrication viscosity even at these extreme bearing temperatures. SKF's knowledge of lubricants and friction are unmatched throughout the world.





Evolving by-wire technology
SKF has unique expertize and knowledge in fast growing by-wire technology, from fly-by-wire, to drive-by-wire, to work-bywire. SKF pioneered practical fly-by-wire technology and is a close working partner with all aerospace industry leaders. As an example, virtually all aircraft of the Airbus design use SKF by-wire systems for cockpit flight control. SKF is also a leader in automotive drive-by-wire, having jointly developed the revolutionary Filo and Novanta concept cars which employ SKF mechatronics for steering and braking. Further by-wire development has led SKF to produce an allelectric forklift truck which uses mechatronics rather than hydraulics for all controls.

Planning for sustainable growth
By their very nature, bearings make a positive contribution to the natural environment. Reduced friction enables machinery to operate more efficiently, consume less power and require less lubrication. SKF is continually raising the performance bar, enabling new generations of high-efficiency products and equipment. With an eye to the future, SKF's global policies and manufacturing techniques are planned and implemented to help protect and preserve the earth's limited natural resources.We remain committed to sustainable, environmentally responsible growth.



Maintaining a 320 km/h R&D lab
In addition to SKF's renowned research and development facilities in Europe and the United States, Formula One car racing provides a unique environment for SKF to push the limits of bearing technology. For over 50 years, SKF products, engineering and knowledge have helped make Scuderia Ferrari a formidable force in F1 racing. (The average racing Ferrari utilizes more than 150 SKF components.) Lessons learned here are applied to the products we provide to automakers and the aftermarket worldwide.

Contacts

The product availability as well as the product application is provided worldwide by international SKF Bearing network. For any other SKF address all over the world, please contact one of the below offices or visit our website SKF.com.

EUROPE

Austria
Linear Motion SKF Österreich AG
Tel: +43 (0) 2236 6709 0
Fax: +43 (0) 2236 6709 220
Email: multitec.austria@skf.com

Benelux
SKF Multitec Benelux B.V.
Tel: +31 (0) 30 6 029 029
Fax:+31 (0) 30 6 029 028
Sales office Belgium/Luxembourg:
Tel: +32 (0) 2 5 024 270
Fax:+32 (0) 2 5 027 336
Email: multitec_benelux@skf.com

Czech Republic
SKF Loziska, a.s.
Tel: +420 234 642 111
Fax: +420 234 642 415

France
SKF Equipements:
Tel: + 33 (0) 1 30 12 73 00
Fax:+33 (0) 1 30 12 69 09
Email: equipements.france@skf.com

Germany
SKF GmbH:
Tel: +49 (0) 9721 560
Fax:+49 (0) 9721 566000
Email: mtsgermany@skf.com
SKF Linearsysteme GmbH
Tel: +49 (0) 9721 657 232/233
Fax:+49 (0) 9721 657 111
Email: lin.sales@skf.com

Italy
SKF Multitec S.p.A
Tel: +39 011 22 49 01
Fax:+39 011 22 49 233
Email: mutitec.italy@skf.com

Denmark, Finland, Norway, Sweden
SKF Multitec AB
Tel: +46 42 253 500
Fax:+46 42 253 545
Email: customerservice.multitec@skf.com

Russia
SKF Moscow
Tel:/Fax: +7 095 31 777 01

Spain
SKF Productos Industriales, S.A
Tel: +34 93 377 99 77
Fax:+34 93 474 20 39
Email: prod.ind@skf.com

Switzerland
SKF LM&PT Switzerland:
Tel: +41 1 825 81 81
Fax:+41 1 825 82 82
Email: skf.schweiz@skf.com

UK
SKF Engineering Products Ltd.
Tel: +44 (0) 1582 496 735
Fax:+44 (0) 1582 496 574
Email: skf.epl@skf.com

AMERICAS

USA
SKF Motion Technologies
Toll free : +1 800 541 3624
Tel: +1 610 861 4800
Fax :+1 610 861 4811
Email: motiontech.usa@skf.com

Canada
SKF Canada Ltd.
Tel: +1 416 299 1220
Fax:+1 416 299 0501

Brazil
SKF do Brasil Litda.
Tel: + 55 11 4619 9114
Fax:+ 55 11 4619 9199

ASIA

China
SKF China Ltd. – Shanghai
Tel: +86 21 5306 8866
Fax:+86 21 5306 5533

India
SKF India Ltd.
Tel: +91 20 5611 2477
Fax:+91 20 2745 1266

Japan
SKF Japan Ltd
Tel: +81 3 3436 4129
Fax:+81 3 3578 1014

Korea
SKF Korea Ltd
Tel: +82 (0)51 920 5330
Fax:+82 (0)51 946 5310

Taiwan
SKF Bearing Services Taiwan Ltd.
Tel: +886 4 2565 3166
Fax:+886 4 2565 3180

www.skf.com

Linear Motion
Ball & Roller screws

Contact

Linear motion from SKF
www.linearmotion.skf.com

Gamfior S.p.A.
C.so Giulio Cesare 424/int. 29
10156 Torino - Italia
Tel. 011 222 11 11
Fax 011 262 09 06
www.gamfior.com

Represented by:

® SKF is a registered tredemark of SKF

© SKF 2007
The contents of this publication are the copyright of the publisher and may not be reproduced (even extracts) unless permission is granted. Every care has been taken to ensure the accuracy of information contained in this publication but no liability can can be accepted for any loss or damage whether direct, indirect or consequential arising out of the use of the information contained herein.

Publication **4621/1 EN** Printed in Italy